VICINITY MAP

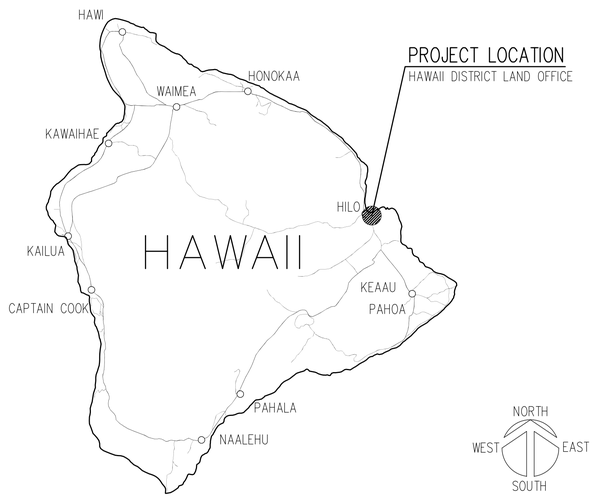

LOCATION MAP

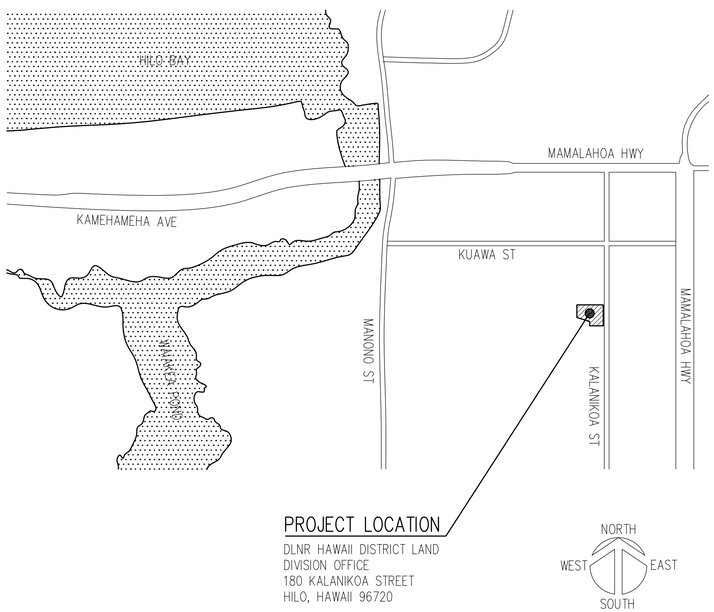

Eric S. Takamura
WASTEWATER DIVISION CHIEF

DATE: 8/24/2020

FRED K. ERSKINE
LICENSED PROFESSIONAL ARCHITECT
No. 10192
HAWAII, U.S.A.

THIS LICENSE EXPIRES APRIL 30, 2022

Fred K. Erskine
SIGNATURE

THIS WORK WAS PREPARED BY ME OR UNDER MY SUPERVISION AND CONSTRUCTION OF THIS PROJECT WILL BE UNDER MY OBSERVATION. (OBSERVATION OF CONSTRUCTION IS REQUIRED BY CHAPTER 464, PART I, OF THE HAWAII ADMINISTRATIVE RULES, DEPARTMENT OF COMMERCE AND CONSUMER AFFAIRS ENTITLED PROFESSIONAL ENGINEERS, ARCHITECTS, SURVEYORS AND LANDSCAPE ARCHITECTS).

STATE OF HAWAII

DEPARTMENT OF LAND AND NATURAL RESOURCES

ENGINEERING DIVISION

FOR

LAND DIVISION

JOB NO. E00BH30A

HAWAII DISTRICT LAND OFFICE

HILO, HAWAII

TMK: (3) 2-2-032: 011

SCOPE OF WORK: RENOVATION OF AN EXISTING ONE-STORY BUILDING AND SITE FOR THE DLNR HAWAII DISTRICT LAND OFFICE (HDLO).

LIST OF CONSULTANTS

ARCHITECT
ERSKINE ARCHITECTS, INC
540 LAGOON DRIVE, SUITE 4
HONOLULU, HAWAII 96819

CIVIL ENGINEER
THE LIMTIACO CONSULTING GROUP
1622 KANAKANUI STREET
HONOLULU, HAWAII 96817

MECHANICAL ENGINEER
MECHANICAL ENTERPRISES, INC
501 SUMNER ST, SUITE 503
HONOLULU, HAWAII 96817

ENVIRONMENTAL
ENVIROSERVICES & TRAINING CENTER, LLC
505 WARD AVE, SUITE 202
HONOLULU, HAWAII 96814

STRUCTURAL ENGINEER
IWAMOTO ENGINEERING CONSULTANTS, INC
98-029 HEKAHA STREET, SUITE 37
AIEA, HAWAII 96701

LANDSCAPE ARCHITECT
KTL DESIGN, LLC
200 KOHOLA STREET
HILO, HAWAII 96720

ELECTRICAL ENGINEER
ALBERT CHONG ASSOCIATES, INC
1117 KAPAHULU AVE
HONOLULU, HAWAII 96816

SURVEYOR
IMATA & ASSOCIATES, INC
171 KAPIOLANI STREET
HILO, HAWAII 96720

SPECIAL INSPECTION:

A. CONTRACTOR SHALL PAY FOR AND BE RESPONSIBLE FOR ENSURING THAT SPECIAL INSPECTION OF PORTIONS OF THE WORK, AS REQUIRED BY THE BUILDING CODE OF THE COUNTY OF HAWAII, IS MADE AT THE APPROPRIATE TIME. THE CONTRACTOR SHALL GIVE TIMELY NOTICE OF WHEN AND WHERE INSPECTIONS ARE TO BE MADE AND PROVIDE ACCESS FOR THE INSPECTOR. THE CONTRACTOR SHALL CORRECT DEFECTIVE WORK AT NO ADDITIONAL COST TO THE STATE AND PAY FOR RE-INSPECTION.

B. THE FOLLOWING STRUCTURAL WORK REQUIRES SPECIAL INSPECTION:
   A. MASONRY CONSTRUCTION
   B. DRILLED AND EPOXIED THREADED RODS IN CONCRETE OR MASONRY

C. SPECIAL INSPECTION IS NOT REQUIRED FOR FOUNDATION CONCRETE AND REINFORCING STEEL. FOUNDATIONS WERE DESIGNED WITH F'C = 2,500 PSI.

D. THE SPECIAL INSPECTOR SHALL FURNISH INSPECTION REPORTS TO THE STATE, LICENSED ENGINEER OR ARCHITECT OF RECORD, AND OTHER STATE-DESIGNATED PERSONS. REPORTS SHALL INDICATE THAT WORK INSPECTED WAS DONE IN CONFORMANCE TO APPROVED CONSTRUCTION DOCUMENTS. THE SPECIAL INSPECTOR SHALL SUBMIT A FINAL SIGNED REPORT TO THE STATE AND LICENSED ENGINEER OR ARCHITECT OF RECORD, STATING WHETHER THE WORK REQUIRING SPECIAL INSPECTION WAS, TO THE BEST OF THE INSPECTOR'S KNOWLEDGE, IN CONFORMANCE TO THE APPROVED PLANS AND SPECIFICATIONS AND THE APPLICABLE WORKMANSHIP PROVISIONS OF THIS CODE. PRIOR TO THE FINAL INSPECTION REQUIRED UNDER THE BUILDING CODE SECTION 109.3.10 THE LICENSED ENGINEER OR ARCHITECT OF RECORD SHALL SUBMIT A WRITTEN STATEMENT VERIFYING RECEIPT OF THE FINAL INSPECTION REPORTS AND DOCUMENTING THAT THERE ARE NO UNRESOLVED CODE REQUIREMENTS THAT CREATE SIGNIFICANT PUBLIC SAFETY DEFICIENCIES.

E. CONTRACTOR SHALL SUBMIT A STATEMENT CONTAINING AN ACKNOWLEDGEMENT OF AWARENESS OF THE SPECIAL INSPECTION REQUIREMENTS CONTAINED ON THE DRAWINGS AND THAT THE CONSTRUCTION REQUIRING SPECIAL INSPECTIONS WILL BE MADE ACCESSIBLE FOR INSPECTIONS.

F. SPECIAL INSPECTION COSTS SHALL BE BORNE BY THE CONTRACTOR.

APPROVED: DATE: 11/25/2022

Russell Tsuji
RUSSELL Y. TSUJI
ADMINISTRATOR
LAND DIVISION
DEPARTMENT OF LAND AND NATURAL RESOURCES

APPROVED: DATE: 11/28/2022

CARDY K. CHANG, P.E.
CHIEF ENGINEER
ENGINEERING DIVISION
DEPARTMENT OF LAND AND NATURAL RESOURCES

REVISION NO.	SYM.	DESCRIPTION	SHT./OF	DATE	APPROVED

DRAWING NO. T-001

JOB NO. E00BH30A, HAWAII DISTRICT LAND DIVISION OFFICE

GENERAL NOTES

1. ALL WORK SHOWN IS NEW UNLESS OTHERWISE NOTED.
2. COMPLY WITH ALL APPLICABLE COUNTY OF HAWAII, STATE, AND FEDERAL LAWS, BUILDING CODES, THEIR ADDITIONS, ADDENDUMS, AND AMENDMENTS IN THE CONSTRUCTION OF THIS PROJECT.
3. THE CONTRACTOR SHALL BE RESPONSIBLE FOR CONFORMANCE WITH THE APPLICABLE PROVISIONS OF CHAPTER 54, WATER QUALITY STANDARDS, AND CHAPTER 55, WATER POLLUTION CONTROL, OF TITLE 11, HAWAII ADMINISTRATIVE RULES OF THE STATE DEPARTMENT OF HEALTH.
4. WORKMANSHIP SHALL CONFORM TO THE STATE BUILDING CODE. HOWEVER, WHERE REFERENCE IS MADE TO PERFORMANCE CONFORMING WITH OTHER STANDARDS, THE MORE STRINGENT SHALL APPLY.
5. VERIFY AND CHECK ALL DIMENSIONS AND DETAILS SHOWN ON THE DRAWINGS PRIOR TO THE START OF CONSTRUCTION. CONTRACTOR SHALL BE AWARE OF ALL EXISTING CONDITIONS INVOLVED IN THE WORK. NOTIFY THE STATE IMMEDIATELY, IN WRITING, OF ANY DISCREPANCIES OR DEVIATIONS BETWEEN THE EXISTING DRAWINGS AND CONDITIONS IN THE FIELD, INCLUDING, BUT NOT LIMITED TO, DIMENSIONS, ELEVATIONS, AND CLEARANCES.
6. CAUTION SHALL BE EXERCISED SO THAT NO EXISTING AREAS TO REMAIN ARE DAMAGED. THE CONTRACTOR SHALL BE RESPONSIBLE FOR ANY/ALL CORRECTIVE WORK REQUIRED TO RESTORE DAMAGE TO THE SITE, EXISTING STRUCTURE, AND/OR EXISTING SURFACES. DAMAGED SURFACES SHALL BE CORRECTED TO MATCH EXISTING ADJACENT SURFACES.
7. THE CONTRACTOR SHALL RESTORE TO THE ORIGINAL OR BETTER CONDITION ALL IMPROVEMENTS AND VEGETATION DAMAGED AS A RESULT OF THE CONSTRUCTION INCLUDING PAVEMENTS, EMBANKMENTS, CURBS, SIGNS, LANDSCAPING, STRUCTURES, UTILITIES, WALLS, FENCES, ETC. UNLESS PROVIDED FOR SPECIFICALLY IN THE PROPOSAL, DEMOLITION AND RESTORATION OF EXISTING ITEMS SHALL BE INCIDENTAL.
8. NO CONTRACTOR SHALL PERFORM ANY CONSTRUCTION OPERATION SO AS TO CAUSE FALLING ROCKS, SOIL, OR DEBRIS IN ANY FORM TO FALL, SLIDE, OR FLOW ONTO ADJOINING PROPERTIES, STREETS, OR NATURAL WATERCOURSES. SHOULD SUCH VIOLATIONS OCCUR, THE COSTS INCURRED FOR ANY REMEDIAL ACTION SHALL BE PAYABLE BY THE CONTRACTOR.
9. THE UNDERGROUND PIPES, CABLES, OR DUCTLINES KNOWN TO EXIST BY THE ARCHITECT FROM SEARCH OF RECORDS ARE INDICATED ON PLANS. THE CONTRACTOR SHALL VERIFY THE LOCATIONS AND DEPTHS OF THE FACILITIES AND EXERCISE PROPER CARE IN EXCAVATING THE AREA. ALL DAMAGED PORTIONS SHALL BE REPLACED IN ACCORDANCE WITH THE STANDARDS AND SPECIFICATIONS OF THE AFFECTED UTILITY COMPANY AND SHALL BE THE CONTRACTORS RESPONSIBILITY. PERSONAL INJURY RESULTING FROM CONTACT WITH EXISTING UTILITIES SHALL BE THE CONTRACTOR'S RESPONSIBILITY. WHEREVER CONNECTIONS OF NEW UTILITIES TO EXISTING UTILITIES ARE SHOWN ON THE DRAWINGS, THE CONTRACTOR SHALL EXPOSE THE EXISTING LINES AT THE PROPOSED CONNECTIONS TO VERIFY THEIR LOCATIONS AND DEPTHS PRIOR TO EXCAVATION FOR NEW LINES.
10. ALL EXISTING UTILITIES, WHETHER OR NOT SHOWN ON THE PLANS, SHALL BE PROTECTED AT ALL TIMES BY THE CONTRACTOR DURING CONSTRUCTION AND ANY DAMAGE TO THE EXISTING UTILITIES SHALL BE REPAIRED AND PAID FOR BY THE CONTRACTOR.
11. THE CONTRACTOR SHALL NOTIFY ALL AGENCIES TO VERIFY THE ACTUAL LOCATION OF ALL UTILITIES IN THE PROJECT AREA PRIOR TO EXCAVATION. THE CONTRACTOR SHALL COORDINATE THE WORK WITH THE UTILITY AGENCIES.
12. ALL REQUIRED UTILITY ADJUSTMENTS SUCH AS MANHOLE AND/OR VALVE BOX FRAMES AND COVERS SHALL BE DONE BY THE CONTRACTOR AND SHALL BE CONSIDERED INCIDENTAL TO THE WORK.
13. THE CONTRACTOR SHALL NOTIFY THE ONE CALL CENTER AT (866) 423-7287 AT LEAST 5 WORKING DAYS PRIOR TO THE START OF EXCAVATION OR TRENCHING.
14. EXCEPT WHERE OTHERWISE DIRECTED BY THE STATE, ALL DISPLACED MATERIALS HAVING SALVAGE VALUE SHALL BE CAREFULLY AND NEATLY STACKED OR STORED ON THE PREMISES WHERE DIRECTED BY THE STATE AND SHALL REMAIN THE PROPERTY OF THE STATE. ALL DISMANTLED AND DEMOLISHED MATERIALS HAVING NO SALVAGE VALUE AS DETERMINED BY THE STATE SHALL BECOME THE PROPERTY OF THE CONTRACTOR AND SHALL BE COMPLETELY REMOVED AND HAULED AWAY FROM THE PREMISES.
15. CONTRACTOR SHALL BE RESPONSIBLE FOR MAINTAINING THE JOB SITE IN A NEAT AND SAFE CONDITION. ALL WORK SHALL BE PERFORMED WITHIN LIMITS OF WORK AREAS COORDINATED WITH THE STATE. DELIVERY OF MATERIALS AND EQUIPMENT SHALL BE COORDINATED TO MINIMIZE DISRUPTION OF FACILITY OPERATIONS. CONTRACTOR SHALL BE RESPONSIBLE FOR CONTROL OF NOISE, DEBRIS AND DUST TO PREVENT DISRUPTION OF FACILITY OPERATIONS, ADJACENT PROPERTY OWNERS, TENANTS, ETC. CONTRACTOR SHALL PROVIDE AND MAINTAIN SUITABLE BARRIERS AS REQUIRED TO PREVENT PUBLIC ENTRY, AND TO PROTECT THE WORK AND ADJACENT BUILDINGS, AREAS, AND PROPERTIES FROM CONSTRUCTION ACTIVITIES. BARRIERS SHALL BE REMOVED WHEN NO LONGER REQUIRED.
16. THE CONTRACTOR AGREES TO ASSUME SOLE AND COMPLETE RESPONSIBILITY FOR THE JOB SITE CONDITIONS DURING THE COURSE OF CONSTRUCTION OF THIS PROJECT, INCLUDING THE SAFETY OF ALL PERSONS AND PROPERTY, AND THAT THIS REQUIREMENT SHALL APPLY CONTINUOUSLY AND NOT BE LIMITED TO NORMAL WORK HOURS.
17. THE JOB SITE MUST BE LEFT IN A SAFE, SECURE CONDITION AT THE END OF EACH CONSTRUCTION WORK DAY. CLEAN UP AND REMOVE FROM THE JOB SITE ALL RUBBISH AND MAINTAIN THE PREMISES IN A CLEAN, ORDERLY CONDITION AT ALL TIMES.
18. UPON COMPLETION OF CONSTRUCTION THE ENTIRE JOB SITE SHALL BE CLEANED OF ALL RUBBISH AND DEBRIS.
19. AREAS FOR CONTRACT ZONE LIMITS, MATERIALS STORAGE, SCHEDULING OF WORK, TRASH DISPOSAL, WORKMEN'S PARKING, ETC., SHALL BE COORDINATED WITH THE STATE. COORDINATE ALL WORK, SCHEDULING, STAGING, AND ADMINISTRATIVE REQUIREMENTS WITH THE STATE.
20. ALL WORK SHALL CONFORM WITH THE 2010 ADA STANDARDS FOR ACCESSIBLE DESIGN.
21. WHERE PEDESTRIAN WALKWAYS EXIST, THEY SHALL BE MAINTAINED IN PASSABLE CONDITION OR OTHER FACILITIES FOR PEDESTRIANS SHALL BE PROVIDED. TEMPORARY PASSAGEWAYS SHALL BE ACCESSIBLE PER 2010 ADA STANDARDS FOR ACCESSIBLE DESIGN CHAPTER 2, SECTION 201.3 AND 206.1.
22. NO BLASTING SHALL BE ALLOWED ON THIS PROJECT.
23. THE CONTRACTOR SHALL OBTAIN AND PAY FOR ALL REQUIRED PERMITS FROM APPROPRIATE GOVERNMENT AGENCIES.
24. THE CONTRACTOR SHALL MAKE ARRANGEMENTS FOR TEMPORARY UTILITIES SUCH AS ELECTRICITY, WATER, ETC. REQUIRED FOR CONSTRUCTION OPERATIONS AND ALL SUCH COSTS SHALL BE BORNE BY THE CONTRACTOR.

PROJECT DATA

PROJECT SITE INFORMATION:

OWNER:	STATE OF HAWAII
PROPERTY OWNER:	STATE OF HAWAII
PROPERTY ADDRESS:	180 KALANIKOA STREET, HILO, HAWAII 96720
TAX MAP KEY:	(3) 2-3-032: 011
LOT AREA:	.456 acres 19,863 SF

LAND USE INFORMATION:

ZONING:	ML-20 LIMITED INDUSTRIAL DISTRICT
FRONT YARD:	15 FEET
REAR YARD	NONE
SIDE & REAR YARD:	NONE
HEIGHT LIMIT	45 FEET
FLOOD ZONE:	ZONE 'X'
SMA:	IN SMA
HISTORIC REGISTER:	NONE
SPECIAL DISTRICT:	NOT IN SPECIAL DISTRICT
STATE LAND USE:	URBAN
USE:	PUBLIC

CODES & STANDARDS:

2012 INTERNATIONAL BUILDING CODE AS AMENDED BY THE STATE OF HAWAII
2015 INTERNATIONAL ENERGY CONSERVATION CODE
2012 UNIFORM PLUMBING CODE
2012 NFPA 1, NATIONAL FIRE PROTECTION AGENCY
2017 NATIONAL ELECTRIC CODE
2010 ADA STANDARDS FOR ACCESSIBLE DESIGN

OCCUPANCY GROUP(S):	B, S-1
TYPE OF CONSTRUCTION:	IIB
ALLOWABLE AREA(S)	GROUP B
with frontage increase	GROUP S-1
ALLOWABLE HEIGHT	3 STORIES
NO. OF STORIES:	1

FLOOR AREA CALCULATIONS:
STORAGE & ADMINISTRATION

NEW SPACES:	AREA (SF)	OCC LOAD FACTOR	NO. OF OCC (SF/OCC)
RECEPTION	65	100	1
OPEN OFFICE	887	100	9
CONFERENCE ROOM	400	15	27
BREAK ROOM	190	15	13
MANAGER'S OFFICE	210	100	2
LAND AGENT 1	162	100	2
LAND AGENT 2	139	100	1
LAND AGENT 3	149	100	1
RESTROOM	70	300	1
UTILITY ROOM	52	300	1
VAULT	105	300	1
STORAGE	1,588	300	5
TOTAL	4017		64

LOT COVERAGE:

BUILDING:	AREA (SF)	
OFFICE	2,429	
STORAGE	1,588	
LOT COVERAGE		4,017

PERCENTAGE OF LOT COVERAGE:

PARKING AND LOADING

LUO REQUIREMENTS: SHARED USE	AREA (SF)	FACTOR	NO. OF STALLS
COMMERCIAL USE	4,017	300	13
TOTAL REQUIRED:			13
			13 STALLS REQ'D.

PARKING STALLS (OFF-STREET):	NO. OF STALLS
OFF-STREET STALLS	13
ACCESSIBLE STALLS	2
TOTAL PARKING PROVIDED:	15

INDEX TO DRAWINGS

SHEET NO.	DRAWING NO.	SHEET DESCRIPTION
1	T-001	TITLE SHEET
2	T-002	INDEX TO DRAWINGS, GENERAL NOTES
3	T-003	ABBREVIATIONS, DRAWING SYMBOLS
4	T-004	FIXTURE MOUNTING HEIGHTS
CIVIL		
5	C-001	CIVIL GENERAL NOTES & CIVIL DRAWING INDEX
6	C-002	CIVIL GENERAL NOTES
7	C-003	CIVIL GENERAL NOTES & ABBREVIATIONS
8	C-004	EROSION & SEDIMENT CONTROL PLAN
9	C-100	SITE & UTILITIES PLAN
10	C-110	GRADING & DRAINAGE PLAN
11	C-200	CIVIL DETAILS
12	C-201	CIVIL DETAILS
13	C-202	CIVIL DETAILS
14	C-203	CIVIL DETAILS
15	C-204	CIVIL DETAILS
16	C-300	TRAFFIC CONTROL PLAN
LANDSCAPE		
17	L-100	LANDSCAPE PLAN
18	L-200	LANDSCAPE DETAILS
ARCHITECTURAL		
19	A-001	OVERALL SITE PLAN
20	A-100	DEMOLITION SITE PLAN
21	A-101	DEMOLITION FLOOR PLAN
22	A-102	DEMOLITION ROOF PLAN
23	A-103	DEMOLITION REFLECTED CEILING PLAN
24	A-201	REPAIR FLOOR PLAN
25	A-202	REPAIR ROOF PLAN
26	A-203	REPAIR REFLECTED CEILING PLAN
27	A-204	PARTIAL REPAIR FLOOR PLAN
28	A-205	FINISH FLOOR PLAN
29	A-206	ADDITIVE BID NO. 1 – PV SYSTEM
30	A-301	EXTERIOR ELEVATIONS
31	A-401	BUILDING SECTIONS
32	A-402	WALL SECTIONS
33	A-403	PARTITION TYPES
34	A-404	PARTITION TYPES
35	A-501	INTERIOR ELEVATIONS
36	A-502	INTERIOR ELEVATIONS
37	A-503	INTERIOR ELEVATIONS
38	A-601	DOOR AND WINDOW SCHEDULE
39	A-602	SIGNAGE SCHEDULES & DETAILS
40	A-701	DOOR DETAILS
41	A-702	WINDOW & STOREFRONT DETAILS
42	A-703	CASEWORK DETAILS
43	A-704	ROOF DETAILS
44	A-705	MISC DETAILS
45	A-706	SITE DETAILS
STRUCTURAL		
46	S-001	GENERAL NOTES
47	S-002	GENERAL NOTES & TYPICAL DETAILS
48	S-003	GENERAL NOTES & TYPICAL DETAILS
49	S-004	TYPICAL DETAILS
50	S-005	TYPICAL DETAILS
51	S-101	EXISTING FOUNDATION DEMO PLAN
52	S-102	EXISTING FOUNDATION RENOVATION PLAN
53	S-201	EXISTING ROOF FRAMING DEMO PLAN
54	S-202	EXISTING ROOF FRAMING RENOVATION PLAN
55	S-301	SECTIONS
MECHANICAL		
56	M-001	GENERAL NOTES
57	M-101	PLUMBING DEMOLITION PLAN
58	M-102	MECHANICAL DEMOLITION PLAN
59	M-201	PLUMBING NEW WORK PLAN
60	M-202	NEW MECHANICAL PLAN
61	M-301	SANITARY AND WATER DIAGRAMS
62	M-401	MECHANICAL EQUIPMENT SCHEDULE
63	M-501	MECHANICAL DETAILS
ELECTRICAL		
64	E-001	ELECTRICAL SYMBOLS, GENERAL ELECTRICAL NOTES
65	E-101	OVERALL ELECTRICAL DEMOLITION SITE PLAN
66	E-102	OVERALL NEW ELECTRICAL SITE PLAN
67	E-201	LIGHTING DEMOLITION PLAN
68	E-202	POWER AND SIGNAL DEMOLITION PLAN
69	E-301	NEW LIGHTING PLAN
70	E-302	NEW POWER AND SIGNAL PLAN
71	E-401	EXISTING SERVICE EQUIPMENT DEMOLITION DETAIL, DEMOLITION SINGLE LINE DIAGRAM
72	E-402	ELECTRICAL DETAILS, NEW SINGLE LINE DIAGRAM
73	E-403	PV WIRING DIAGRAM
74	E-501	TELECOMMUNICATION DETAILS
75	E-502	ELECTRICAL DETAILS
76	E-601	LUMINAIRE SCHEDULE
77	E-602	PANEL SCHEDULES

REVISION NO.	SYM.	DESCRIPTION	SHT./OF	DATE	APPROVED

FRED K. ERSKINE
LICENSED PROFESSIONAL ARCHITECT
No. 10192
HAWAII, U.S.A.

THIS LICENSE EXPIRES APRIL 30, 2024

SIGNATURE

THIS WORK WAS PREPARED BY ME OR UNDER MY SUPERVISION AND CONSTRUCTION OF THIS PROJECT WILL BE UNDER MY OBSERVATION. (OBSERVATION OF CONSTRUCTION AS DEFINED IN CHAPTER 16-115 OF THE HAWAII ADMINISTRATIVE RULES, DEPARTMENT OF COMMERCE AND CONSUMER AFFAIRS ENTITLED PROFESSIONAL ENGINEERS, ARCHITECTS, SURVEYORS AND LANDSCAPE ARCHITECTS).

STATE OF HAWAII
DEPARTMENT OF LAND AND NATURAL RESOURCES
ENGINEERING DIVISION

HAWAII DISTRICT LAND OFFICE
HILO, HAWAI`I

GENERAL NOTES, PROJECT DATA, & INDEX TO DRAWINGS

DESIGNED: KK	SUBMITTED:
DRAWN: KA, TW, WL	DATE: NOVEMBER 2022
CHECKED: FE	SCALE: AS NOTED

APPROVED:
CHIEF ENGINEER

Carty Chang
E-signed 2022-11-28 04:17PM HST
carty.s.chang@hawaii.gov
State of Hawaii
Chief Engineer

DRAWING NO.
T-002

ABBREVIATIONS

ABV	ABOVE
AC	ASPHALT CONCRETE
A/C	AIR CONDITIONING
ACP	ACOUSTICAL PANEL CEILING
AD	AREA DRAIN
ADJ	ADJUSTABLE
ADMIN	ADMINSTRATION
AF	ACCESS FLOORING
AFF	ABOVE FINISH FLOOR
AFG	ABOVE FINISH GRADE
AHU	AIR HANDLING UNIT
ALUM	ALUMINUM
ALT	ALTERNATE
AP	ACCESS PANEL
APPROX	APPROXIMATE
ARCH	ARCHITECT(URAL)
ASPH	ASPHALT
BCS	BABY CHANGING STATION
BD	BOARD
BLW	BELOW
BVL	BEVELED
BIT	BITUMINOUS
BKS	BACKSPLASH
BL	BUILDING LINE
BLDG	BUILDING
BM	BEAM
BOT	BOTTOM
BRG	BEARING
BS	BOTH SIDES
BTW	BETWEEN
C/C	CENTER TO CENTER
CAB	CABINET
CCC	COMMUNITY CONFERENCE CENTER
CIP	CAST IN PLACE
CJ	CONSTRUCTION JOINT
CJT	CONTROL JOINT
CLG	CEILING
CLR	CLEAR
CMU	CONCRETE MASONRY UNIT
COL	COLUMN
COMB	COMBINATION
CONC	CONCRETE
CONT	CONTINOUS
CONX	CONNECTION
CONST	CONSTRUCTION
CORR	CORRIDOR
COUNS	COUNSELOR
CPT	CARPET
CRM	CONCRETE ROCK MASONRY
CSWK	CASEWORK
CT	CERAMIC TILE
CTR	CENTER
CTSK	COUNTER SINK
DAR	DEPARTMENT OF AQUATIC RESOURCES
DB	DECIBEL
DBL	DOUBLE
DEFS	DIRECT APPLIED EXT FINISH SYSTEM
DF	DRINKING FOUNTAIN
DIAG	DIAGONAL
DIM	DIMENSION
DISP	DISPLAY
DIV	DIVISION
DOCARE	DIVISION OF CONSERVATION AND RESOURCES ENFORCEMENT
DN	DOWN
DP	DAMPPROOFING
DR	DOOR
DS	DOWNSPOUT
DTL	DETAIL
DRWG	DRAWING
E	EAST
EA	EACH
EF	EXHAUST FAN
EFG	ENTRANCE FOOT GRILLE
ENG	ENGINEERING DIVISION
EG	EXISTING GRADE
EGS	EXPOSED GRID SYSTEM
EJ	EXPANSION JOINT
ELEC	ELECTRICAL
ELEV	ELEVATION
ENCL	ENCLOSED
EQ	EQUAL
EQPM	EQUIPMENT
EWS	EYE WASH STATION
EXH	EXHAUST
EXP	EXPOSED
EXPS	EXPANSION
EXST	EXISTING
EXT	EXTERIOR
EXTD	EXTRUDED
FAB	FABRIC
FCO	FLOOR CLEAN OUT
FD	FLOOR DRAIN
FDN	FOUNDATION
FE	FIRE EXTINGUISHER
FEC	FIRE EXTINGUISHER CABINET
FF	FINISH FLOOR
FFE	FINISH FLOOR ELEVATION
FH	FIRE HYDRANT
FIRE PROT	FIRE PROTECTION
FIN	FINISH
FL	FLOOR
FLEX	FLEXIBLE
FLASH'G	FLASHING
FLRG	FLOORING
FOS	FACE OF STUDS
FOW	FACE OF WALL
FPRF	FIREPROOF
FR	FRAME
FT	FOOT/FEET
GALV	GALVANIZED
GB	GRAB BAR
GL	GLASS
GR	GRADE
GSF	GROSS SQARE FOOTAGE
GWB	GYPSUM WALL BOARD
GYP	GYPSUM
HC	HANDICAPPED
HD	HEAD
HDW	HARDWARE
HDWD	HARDWOOD
HM	HOLLOW METAL
HNDRL	HANDRAIL
HORIZ	HORIZONTAL
HP	HIGH POINT
HR	HOUR
HGT	HEIGHT
HWH	HOT WATER HEATER
IAW	IN ACCORDANCE WITH
ID	INSIDE DIAMETER
IF	INSIDE FACE
IG	INSULATED GLASS
IN	INCHES
INSUL	INSULATION
INT	INTERIOR
ISO	ISOMETRIC
JAN	JANITOR
JT	JOINT
L	LEFT
LAM	LAMINATED
LAND	LANDSCAPE
LAV	LAVATORY
LH	LEFT HAND
LONG	LONGITUDINAL
LP	LOW POINT
LT	LIGHT
LTG	LIGHTING
LVR	LOUVER
MATL	MATERIAL
MAX	MAXIMUM
MECH	MECHANICAL
MEMB	MEMBRANE
MET	METAL
MET LKRS	METAL LOCKERS
MFR	MANUFACTURER
MH	MOUNTING HEIGHT
MIN	MINIMUM
MISC	MISCELLANEOUS
MLDG	MOLDING
MEZZ	MEZZANINE
MGR	MANAGER
MLWK	MILL WORK
MM	MILLIMETERS
MNT	MOUNT/MOUNTING
MO	MASONRY OPENING
MS	METAL STUD
MR	METAL RAILING
MTG	MEETING
MULL	MULLION
N	NORTH
N/A	NOT APPLICABLE
N/R	NON-RATED
NIC	NOT IN CONTRACT
NO	NUMBER
NOM	NOMINAL
NRC	NOISE REDUCTION COEFFICIENT
NSF	NET SQUARE FOOTAGE
NTE	NOT TRUE ELEVATION
NTS	NOT TO SCALE
O/O	OUT TO OUT
OA	OVERALL
OC	ON CENTER
OCC	OCCUPANT
OD	OVERFLOW DRAIN
OF	OUTSIDE FACE
OFOI	OWNER FURNISHED OWNER INSTALLED
OH	OVERHEAD
OPNG	OPENING
OPP	OPPOSITE
OPH	OPPOSITE HAND
OS	ONE SIDE
OVHG	OVERHANG
OVS	OVERFLOW SCUPPER
PJ	PANEL JOINT
PL	PLATE
PLAM	PLASTIC LAMINATE
PLAS	PLASTER
PLBG	PLUMBING
PL	PROPERTY LINE
PNL	PANEL
POC	POINT OF CONNECTION
POL	POLISHED
PR	PAIR
PREFAB	PREFABRICATED
PRG	PROGRAMMABLE SQUARE FOOTAGE
PROJ	PROJECT
PT	POINT
PNT	PAINT
PTD	PAPER TOWEL DISPENSER
PTN	PARTITION
PVMT	PAVEMENT
QTY	QUANTITY
R	RISER
RAD	RADIUS
RCP	REFLECTED CEILING PLAN
RD	ROOF DRAIN
RDL	ROOF DRAIN LEADER
REC	RECESSED
RECT	RECTANGULAR
REINF	REINFORCING
REMV	REMOVABLE
REQ'D	REQUIRED
REQMT(S)	REQUIREMEN(S)
REV	REVISION/REVISED
RH	RIGHT HAND
RM	ROOM
RO	ROUGH OPENING
ROD	ROOF OVERFLOW DRAIN
ROOF'G	ROOFING
RT	RIGHT
RV	RELIEF VENT
S	SOUTH
SAT	SATURATED
SCHED	SCHEDULE
SCWD	SOLID CORE WOOD DOOR
SECT	SECTION
SF	SQUARE FOOT/FEET
SH	SHELF/SHELVES
SHPD	STATE HISTORIC PRESERVATION DIVISION
SHT	SHEET
SHWR	SHOWER
SIM	SIMILAR
SJ	SEISMIC JOINT
SLNT	SEALANT
SOG	SLAB ON GRADE
SL	SLOPE OR SLOPED
SP	DIVISION OF STATE PARKS
SQ	SQUARE
SST	STAINLESS STEEL
STC	SOUND TRANSMISSION CLASS
STAG	STAGGERED
STD	STANDARD
STL	STEEL
STOR	STORAGE
STRUCT	STRUCTURAL
SUSP	SUSPENDED
SYS	SYSTEM
T	TRANSFORMER
TRD	TREAD
T&B	TOP AND BOTTOM
TEMP	TEMPERED
TEX	TEXTURED
THK	THICK
THRESH	THRESHOLD
TKB	TACKBOARD
TLT	TOILET
TOC	TOP OF CONCRETE
TOE	TOP OF EAVE
TOF	TOP OF FOOTING
TOM	TOP OF MASONRY
TOP	TOP OF PLATE
TOS	TOP OF STEEL
TOW	TOP OF WALL
TP	TOILET PARTITION
TPD	TOILET PAPER DISPENSER
TR	TRASH RECEPTACLE
TRTD	TREATED
TS	TUBE STEEL OR THIN SET
TWF	THROUGH-WALL FLASHING
TYP	TYPICAL
UC	UNDERCOUNTER
UGND	UNDERGROUND
UNEX	UNEXCAVATED
UNFIN	UNFINISHED
UON	UNLESS OTHERWISE NOTED
UR	URINAL
VCT	VINYL COMPOSITION TILE
VENT	VENTILATION
VERT	VERTICAL
VEST	VESTIBULE
VTR	VENT THROUGH ROOF
W	WEST
W/	WITH
W/O	WITHIOUT
WO	WHERE OCCURS
WC	WATER CLOSET
WD	WOOD
WDW	WINDOW
WH	WATER HEATER
WM	WIRE MESH
WPFG	WATERPROOFING
WS	WOOD STUDS
WWF	WELDED WIRE FABRIC
YD	YARD

DRAWING SYMBOLS

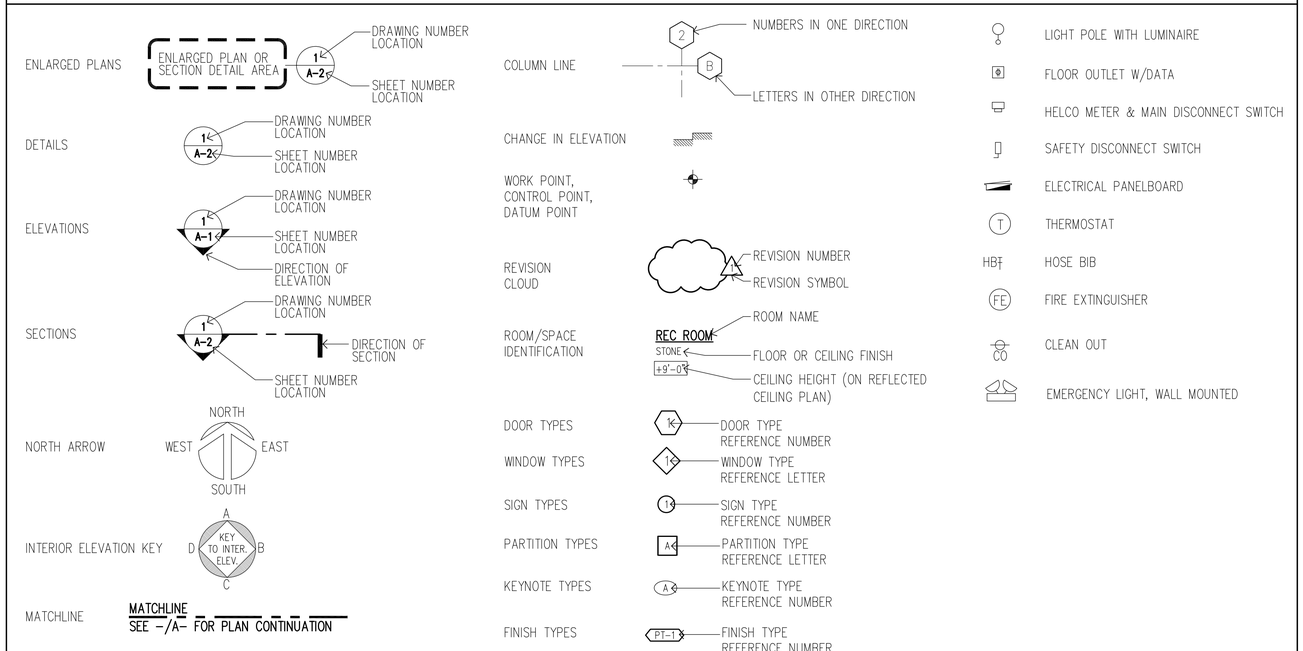

HAWAI'I COUNTY ENERGY CODE

2015 IECC, HAWAI'I REVISED STATUTES HRS 107-24 TO 28 & HAWAI'I ADMINISTRATIVE RULES HAR 3-181.1

COMMERCIAL BUILDING ENERGY EFFICIENCY STANDARDS

I CERTIFY THAT, TO THE BEST OF MY KNOWLEDGE, THIS PROJECTS DESIGN SUBSTANTIALLY CONFORMS TO THE BUILDING ENERGY EFFICIENCY STANDARDS PERTAINING TO THE **COMMERCIAL PROVISIONS FOR BUILDING ENVELOPE COMPONENTS (C402)** OF THE 2015 IECC WITH AMENDMENTS PER HAR 3 -181.1:

COMPLIANCE METHOD

- ☒ 2015 IECC as amended. Mandatory & Prescriptive
- ☐ 2015 IECC as amended. Mandatory & Total Building Performance
- ☐ ASHRAE Standard 90.1-2013. Mandatory & Prescriptive
- ☐ ASHRAE Standard 90.1-2013. Mandatory & Energy Cost Budget Method

INFORMATION IN CONSTRUCTION DOCUMENTS	Yes	N/A
Roof insulation R-value	☒	☐
Roof insulation type and location	☒	☐
Roof membrane solar reflectance and thermal emittance	☒	☐
Wall insulation R-value	☐	☒
Wall insulation type and location	☐	☒
Window SHGC	☒	☐
Window U-factor	☒	☐
Skylight SHGC	☒	☐
Skylight U-factor	☒	☐

NOTES

EXISTING EXTERIOR WALL TO REMAIN IS GROUTED CONCRETE MASONRY UNIT (CMU).

Signature:_____ Date:_____ Stamp, Date & Two-Part Statement

Name: FRED K. ERSKINE

Title : PRESIDENT

License No. : 10192

Project Name: HAWAII DISTRICT LAND OFFICE

Project TMK: (3) (3) 2-2-032: 011

REVISION NO.	SYM.	DESCRIPTION	SHT./OF	DATE	APPROVED

FRED K. ERSKINE LICENSED PROFESSIONAL ARCHITECT No. 10192 HAWAII, U.S.A.

THIS LICENSE EXPIRES APRIL 30, 2024

SIGNATURE

THIS WORK WAS PREPARED BY ME OR UNDER MY SUPERVISION AND COMPLETION OF THIS PROJECT WILL BE UNDER MY OBSERVATION. OBSERVATION OF CONSTRUCTION AS DEFINED IN CHAPTER 16-115 OF THE HAWAII ADMINISTRATIVE RULES, DEPARTMENT OF COMMERCE AND CONSUMER AFFAIRS ENTITLED PROFESSIONAL ENGINEERS, ARCHITECTS, SURVEYORS AND LANDSCAPE ARCHITECTS).

STATE OF HAWAII
DEPARTMENT OF LAND AND NATURAL RESOURCES
ENGINEERING DIVISION

HAWAII DISTRICT LAND OFFICE
HILO, HAWAI'I

ABBREVIATIONS, DRAWING SYMBOLS, PLOT PLAN

DESIGNED: KK	SUBMITTED:
DRAWN: KA, TW, WL	DATE: FEBRUARY 2021
CHECKED: FE	SCALE: AS NOTED
APPROVED: Carty Chang E-signed 2022-11-28 04:17PM HST carty.s.chang@hawaii.gov State of Hawaii	DRAWING NO. T-003
CHIEF ENGINEER Chief Engineer	

NOTES (THIS SHEET)

1. ALL NOTES & DIMENSIONS PROVIDED ARE FOR GENERAL CONFORMANCE PURPOSES ONLY. THE CONTRACTOR SHALL NOT RELY SOLELY UPON THIS DRWG SHEET FOR MOUNTING, INSTALLATION & CLEARANCE REQUIREMENTS.
2. THE CONTRACTOR SHALL VERIFY ADA MOUNTING, INSTALLATION & CLEARANCE REQUIREMENTS W/ THE MANUFACTURER & OTHER REFERENCED ACCESSIBILITY GUIDES (ADAAG MIN.) PRIOR TO INSTALLATION.
3. WATER CLOSETS ARE TO BE MANUAL FLUSHING TYPE, UNLESS OTHERWISE NOTED.
4. LAV FAUCETS ARE TO BE MANUALLY ACTIVATED UNLESS OTHERWISE NOTED.
5. RESTROOM FIXTURES/ACCESSORIES ABBREVIATIONS:

GB	STAINLESS STEEL GRAB BAR
LAV	LAVATORY
PTD	PAPER TOWEL DISPENSER
SND	SANITARY NAPKIN DISPENSER
SCD	TOILET SEAT COVER DISPENSER
SD	SOAP DISPENSER
TPD	TOILET PAPER DISPENSER
TSCD	TOILET SEAT COVER DISPENSER
WC	WATER CLOSET

6. ALL DIMENSIONS ARE TAKEN FROM THE FACE OF FIN & SHALL INDICATE A CLEAR DIMENSION, UNLESS OTHERWISE NOTED.

KEYNOTES (THIS SHEET)

KEYNOTE NO.	
1	FLUSH CONTROL SHALL BE ACCESSIBLE PER ADAAG 604.5.2.

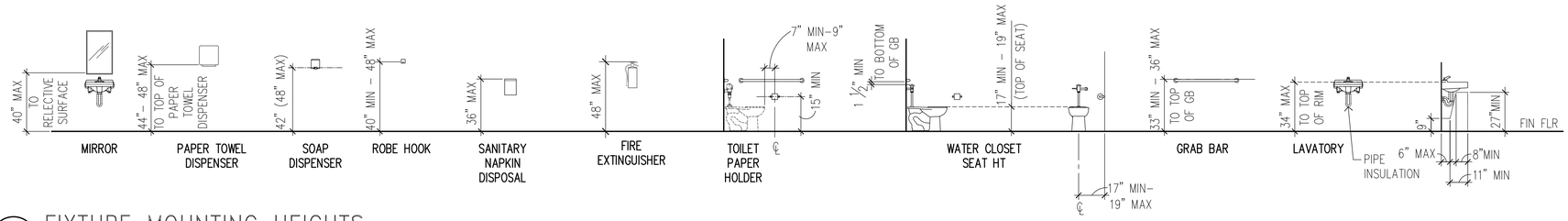

1 FIXTURE MOUNTING HEIGHTS

SCALE: NTS

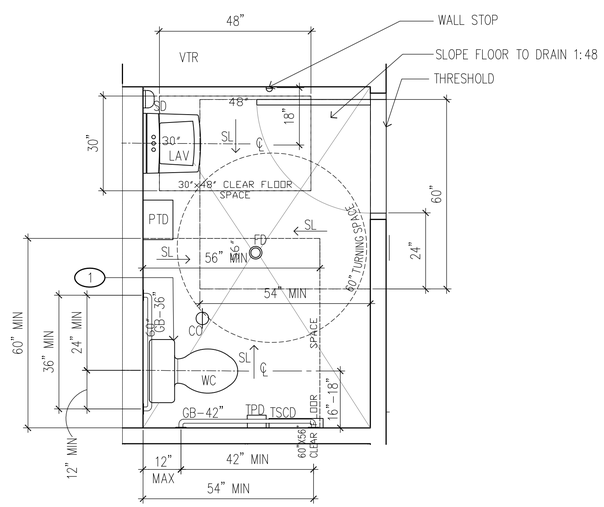

2 RESTROOM CLEARANCE

SCALE: 1/2" = 1'-0"

REVISION NO.	SYM.	DESCRIPTION	SHT./OF	DATE	APPROVED

FRED K. ERSKINE — LICENSED PROFESSIONAL ARCHITECT — No. 10192 — HAWAII, U.S.A.

THIS LICENSE EXPIRES APRIL 30, 2024

SIGNATURE

THIS WORK WAS PREPARED BY ME OR UNDER MY SUPERVISION AND CONSTRUCTION OF THIS PROJECT WILL BE UNDER MY OBSERVATION. OBSERVATION OF CONSTRUCTION AS DEFINED IN CHAPTER 16-115 OF THE HAWAII ADMINISTRATIVE RULES, DEPARTMENT OF COMMERCE AND CONSUMER AFFAIRS ENTITLED "PROFESSIONAL AND VOCATIONAL (ARCHITECTS, SURVEYORS AND LANDSCAPE ARCHITECTS).

STATE OF HAWAII
DEPARTMENT OF LAND AND NATURAL RESOURCES
ENGINEERING DIVISION

HAWAII DISTRICT LAND OFFICE

HILO, HAWAI'I

FIXTURE MOUNTING HEIGHTS

DESIGNED: KK	SUBMITTED:
DRAWN: KA, TW, WL	DATE: FEBRUARY 2021
CHECKED: FE	SCALE: AS NOTED
APPROVED:	DRAWING NO. T-004
CHIEF ENGINEER	

Carty Chang
E-signed 2022-11-28 04:17PM HST
carty.s.chang@hawaii.gov
State of Hawaii
Chief Engineer

CONSTRUCTION NOTES

1. ALL WORK SHALL BE DONE IN ACCORDANCE WITH THE "STANDARD DETAILS FOR PUBLIC WORKS CONSTRUCTION", DATED SEPTEMBER 1984 AND THE "STANDARD SPECIFICATIONS FOR PUBLIC WORKS CONSTRUCTION", DATED SEPTEMBER 1986, AS APPLICABLE TO THE COUNTY OF HAWAII DEPT. OF PUBLIC WORKS, UNLESS INDICATED OTHERWISE IN THE PLANS, THESE NOTES, OR THE SPECIAL PROVISIONS.

2. CONTRACTOR SHALL SECURE THE SERVICES OF A HAWAII LICENSED SURVEYOR TO PROVIDE CONSTRUCTION STAKEOUT.

3. VERIFY AND CHECK ALL DIMENSIONS AND DETAILS SHOWN ON THE DRAWINGS PRIOR TO THE START OF CONSTRUCTION. ANY DISCREPANCY SHALL BE IMMEDIATELY BROUGHT TO THE ATTENTION OF THE STATE FOR DIRECTION.

4. UNDERGROUND PIPES, CABLES OR DUCTLINES KNOWN TO EXIST BY THE ENGINEER FROM THEIR SEARCH OF RECORDS ARE INDICATED ON THE PLANS. THE CONTRACTOR SHALL VERIFY THE LOCATIONS AND DEPTHS OF UTILITIES AND STRUCTURES AND EXERCISE PROPER CARE IN EXCAVATING IN THE AREA. WHENEVER CONNECTIONS OF NEW UTILITIES TO EXISTING UTILITIES ARE SHOWN ON THE PLANS, THE CONTRACTOR SHALL EXPOSE THE EXISTING LINES AT THE PROPOSED CONNECTIONS TO VERITY THEIR LOCATIONS AND DEPTHS PRIOR TO EXCAVATION FOR THE NEW LINES.

5. THE CONTRACTOR SHALL VERIFY THE LOCATION OF ALL EXISTING UTILITIES, WHETHER SHOWN ON THE PLAN OR NOT, AND SHALL BE RESPONSIBLE FOR THE REPAIR OR REPLACEMENT OF THE SAME IN THE EVENT OF DAMAGES DUE TO THEIR CONSTRUCTION PRACTICES. THE CONTRACTOR SHALL COORDINATE THEIR WORK WITH RESPECTIVE UTILITY COMPANIES AS APPROPRIATE.

6. THE GENERAL CONTRACTOR OF THE PROJECT SHALL BE RESPONSIBLE FOR CONFORMANCE WITH APPLICABLE PROVISIONS OF THE HAWAII ADMINISTRATIVE RULES, TITLE 11, CHAPTER 54, "WATER QUALITY STANDARDS," AND TITLE 11, CHAPTER 55, "WATER POLLUTION CONTROL," AS WELL AS HAWAII COUNTY CODE CHAPTER 10 "EROSION AND SEDIMENT CONTROL", AS AMENDED. BEST MANAGEMENT PRACTICES SHALL BE EMPLOYED AT ALL TIMES DURING CONSTRUCTION.

7. THE CONTRACTOR SHALL RESTORE TO THEIR ORIGINAL CONDITION OR BETTER, ALL IMPROVEMENTS DAMAGED AS A RESULT OF THE CONSTRUCTION AT HIS/HER OWN EXPENSE, INCLUDING PAVEMENTS, EMBANKMENTS, CURBS, GUTTERS, DRIVEWAYS, SIDEWALKS, SIGNS, LANDSCAPING, STRUCTURES, UTILITIES, WALLS, FENCES, ETC. UNLESS PROVIDED FOR SPECIFICALLY IN THE PROPOSAL.

8. NO TRENCHING SHALL BE LEFT OPEN FOR MORE THAN FIVE (5) WORKING DAYS, DURING WHICH TIME THE TRENCH SHALL BE PROPERLY CORDONED OFF AND SIGNAGE PROVIDED.

9. CONTRACTOR TO OBTAIN ALL REQUIRED PERMITS.

10. ALL EXISTING UTILITIES TO REMAIN IN USE, WHETHER OR NOT SHOWN ON THE PLANS, SHALL BE PROTECTED AT ALL TIMES BY THE CONTRACTOR DURING CONSTRUCTION UNLESS SPECIFIED ON THE PLANS TO BE ABANDONED. ANY DAMAGES TO EXISTING UTILITIES SHALL BE REPAIRED AND PAID FOR BY THE CONTRACTOR.

11. ESTABLISH FINISH ELEVATIONS FOR ALL UTILITY STRUCTURES, FRAMES AND COVERS WITHIN ACCESSIBLE ROUTES SUCH THAT THEY WILL BE FLUSH WITH THE SURFACE OF THE ADJACENT ACCESSIBLE ROUTE WHEN WORK IS COMPLETED. THE FINAL FINISH ELEVATION OF ANY SUCH ITEM SHALL NOT EXCEED $\frac{1}{4}$" ABOVE OR BELOW THE ADJACENT FINISH ELEVATION OF THE ACCESSIBLE ROUTE AT ANY POINT. VARIATIONS IN EXCESS OF THIS AMOUNT WILL BE CONSIDERED DEFECTIVE WORK AND SHALL BE CORRECTED BY THE CONTRACTOR AT NO COST TO THE STATE.

12. CONFINED SPACE

    FOR ENTRY BY COUNTY PERSONNEL, INCLUDING INSPECTORS, INTO A PERMIT REQUIRED CONFINED SPACE AS DEFINED IN 29 CFR PART 1910.146(b), THE CONTRACTOR SHALL BE RESPONSIBLE FOR PROVIDING:

    I. ALL SAFETY EQUIPMENT REQUIRED BY THE CONFINED SPACE REGULATIONS APPLICABLE TO ALL PARTIES OTHER THAN THE CONSTRUCTION INDUSTRY, TO INCLUDE, BUT NOT LIMITED TO, THE FOLLOWING:

    a. FULL BODY HARNESSES FOR UP TO TWO PERSONNEL.
    b. LIFELINE AND ASSOCIATED CLIPS.
    c. INGRESS/EGRESS AND FALL PROTECTION EQUIPMENT.
    d. TWO-WAY RADIOS (WALKIE-TALKIES) IF OUT OF LINE-OF-SIGHT.
    e. EMERGENCY (ESCAPE) RESPIRATOR (10 MINUTE DURATION).
    f. CELLULAR TELEPHONE TO CALL FOR EMERGENCY ASSISTANCE.
    g. CONTINUOUS GAS DETECTOR (CALIBRATED) TO MEASURE OXYGEN, HYDROGEN SULFIDE, CARBON MONOXIDE AND FLAMMABLES (CAPABLE OF MONITORING AT A DISTANCE AT LEAST 20-FEET AWAY).
    h. PERSONAL MULTI-GAS DETECTOR TO BE CARRIED BY INSPECTOR.

    II. CONTINUOUS FORCED AIR VENTILATION ADEQUATE TO PROVIDE SAFE ENTRY CONDITIONS.

    III. ONE ATTENDANT/RESCUE PERSONNEL TOPSIDE (TWO, IF CONDITIONS WARRANT IT).

13. FOR PROJECT BENCHMARKS, SEE SHEET C-100.

NOTES FOR WORK WITHIN COUNTY RIGHT-OF-WAY

1. ALL WORK SHALL BE DONE IN ACCORDANCE WITH THE COUNTY OF HAWAII, DEPARTMENT OF PUBLIC WORKS "STANDARD SPECIFICATIONS FOR PUBLIC WORKS CONSTRUCTION," DATED SEPTEMBER 1986, AND "STANDARD DETAILS FOR PUBLIC WORKS CONSTRUCTION", DATED SEPTEMBER 1984.

2. THE CONTRACTOR SHALL VERIFY THE LOCATION OF ALL EXISTING UTILITIES WHETHER SHOWN ON THE PLAN OR NOT, AND SHALL BE RESPONSIBLE FOR THE REPAIR OR REPLACEMENT OF SAME IN THE EVENT OF DAMAGES DUE TO THIS CONSTRUCTION PRACTICES. THE CONTRACTOR SHALL COORDINATE HIS WORK WITH RESPECTIVE UTILITY COMPANIES.

3. THE CONTRACTOR SHALL PROVIDE AND INSTALL ALL TRAFFIC CONTROL DEVICES IN CONFORMANCE WITH THE CURRENT VERSION OF THE "MANUAL OF UNIFORM TRAFFIC CONTROL DEVICES FOR STREETS AND HIGHWAYS", AND AS DIRECTED BY THE DEPARTMENT OF PUBLIC WORKS (DPW).

4. THE CONTRACTOR SHALL NOTIFY THE DEPARTMENT OF PUBLIC WORKS 48 HOURS BEFORE THE COMMENCEMENT OF ANY UTILITY LINE WORK TO SCHEDULE A FIELD REVIEW AND SECURE APPROVAL OF THE PROPOSED UTILITY LINE LOCATION WITHIN THE COUNTY RIGHT-OF-WAY.

5. THE PROPOSED UTILITY LINE SHALL BE LAID OUT IN THE FIELD PRIOR TO THE CONDUCTING OF THE FIELD REVIEW BY THE DEPARTMENT OF PUBLIC WORKS.

6. THE FIELD ADJUSTMENTS SHALL BE MADE AS DIRECTED BY THE DEPARTMENT OF PUBLIC WORKS PRIOR TO THE COMMENCEMENT OF ANY UTILITY LINE WORK.

7. THE REQUIRED PERMIT, UNDER CHAPTER 22, ARTICLE 4, DIVISION 1 OF THE HAWAII COUNTY CODE, SHALL BE OBTAINED FROM THE DEPARTMENT OF PUBLIC WORKS BY THE CONTRACTOR FOR WORK WITHIN THE COUNTY RIGHT-OF-WAY.

8. NO WORK WITHIN THE COUNTY RIGHT-OF-WAY SHALL BE DONE ON SATURDAYS, SUNDAYS AND HOLIDAYS ANYTIME WITHOUT PRIOR APPROVAL FROM THE DEPARTMENT OF PUBLIC WORKS. WORK ON NORMAL WORKING DAYS SHALL BE LIMITED BETWEEN THE HOURS OF 7:00 A.M. TO 3:30 P.M.

9. THE CONTRACTOR SHALL PROVIDE AT LEAST ONE (1) LANE FOR TRAFFIC MOVEMENT AT ALL TIMES. TWO (2) LANES FOR TRAFFIC MOVEMENT SHALL BE PROVIDED BETWEEN 3:30 P.M. AND 7:00 A.M.

10. THE EXISTING PAVEMENT SHALL BE SAW-CUT BEFORE THE COMMENCEMENT OF TRENCHING WORK.

11. ANY PAVEMENT OUTSIDE THE CONTRACT ZONE LIMITS DAMAGED AS A RESULT OF CONSTRUCTION OPERATIONS SHALL BE RESTORED TO ITS ORIGINAL CONDITION OR BETTER AS DIRECTED BY THE DPW.

12. A TEMPORARY COLD MIX PATCH SHALL BE APPLIED IMMEDIATELY UPON COMPLETION OF THE BACKFILLING OPERATION AND SHALL BE MAINTAINED BY THE CONTRACTOR UNTIL A PERMANENT PATCH IS AUTHORIZED BY THE DEPARTMENT OF PUBLIC WORKS.

13. NO MATERIAL, EXCEPT THE TRENCH EXCAVATED MATERIAL SHALL BE STOCKPILED CLOSER THAN SIX (6) FEET FROM THE EXISTING EDGE OF PAVEMENT.

14. NO CONSTRUCTION EQUIPMENT SHALL BE PARKED OR ANY MATERIALS STORED WITHIN THE COUNTY ROAD RIGHT-OF-WAY IN SUCH A MANNER THAT THE EQUIPMENT WILL OBSTRUCT THE NORMAL MOVEMENT AND SIGHT DISTANCE OF THE DRIVING MOTORIST, EXCEPT DURING ACTUAL WORKING HOURS.

15. EXCEPT DURING THE ACTUAL WORKING HOURS, ALL SIGNS THAT DO NOT PERTAIN TO THE CONSTRUCTION ACTIVITY, SUCH AS "MEN WORKING" AND "FLAGMAN AHEAD SHALL BE COVERED OR LAID DOWN. HOWEVER, ALL SIGNS NECESSARY FOR THE SAFETY OF THE PUBLIC SHALL BE MAINTAINED.

16. ANY PAVEMENTS MARKINGS, STRUCTURES, AND APPURTENANCES (WITHIN OR OUTSIDE OF THE CONTRACT ZONE LIMITS) DAMAGED AND/OR WORN AWAY UNDER THE PERMIT SHALL BE REPAINTED OR RECONSTRUCTED AS DIRECTED BY THE DEPARTMENT OF PUBLIC WORKS.

17. NO TRENCHING SHALL BE LEFT OPEN FOR MORE THAN FIVE (5) WORKING DAYS.

18. WHEN WORK INTERFERES WITH A SIDEWALK, THE CONTRACTOR SHALL PROVIDE FOR THE SAFE PASSAGE OF PEDESTRIANS INCLUDING THE DISABLED AROUND OR THROUGH THE WORK AREA.

19. THE CONTRACTOR SHALL MAINTAIN, TO THE SATISFACTION OF THE DEPARTMENT OF PUBLIC WORKS, THE AREA WORKED WITHIN THE GOVERNMENT RIGHT-OF-WAY INCLUDING ANY REPAIRS TO THE PAVEMENT AND SHOULDER DAMAGED AS A RESULT OF THE INSTALLATION WORK, FOR A PERIOD OF ONE (1) YEAR FROM THE DATE OF FINAL INSPECTION. THE CONTRACTOR SHALL UNDERTAKE REPAIRS EXPEDITIOUSLY, WHENEVER DIRECTED BY THE DEPARTMENT OF PUBLIC WORKS DURING THE MAINTENANCE PERIOD.

ARCHAEOLOGICAL NOTE

IN THE EVENT THAT A PREVIOUSLY UNKNOWN ARCHAEOLOGICAL FEATURE, HISTORIC PROPERTY, OR HUMAN REMAINS (INCLUDING HUMAN SKELETAL REMAINS, CREMATIONS, CEREMONIAL OBJECTS, FUNERARY OBJECTS, BURIAL GOODS, ETC.) ARE EXPOSED BY CONSTRUCTION, THE CONTRACTOR SHALL CEASE WORK IN THE VICINITY IMMEDIATELY AND NOTIFY THE STATE'S CONSTRUCTION MANAGER, STATE OF HAWAII HISTORIC PRESERVATION DIVISION (SHPD), THE APPROPRIATE MEDICAL EXAMINER OR CORONER, AND THE APPROPRIATE POLICE DEPARTMENT, OF THE DISCOVERY. THE CONTRACTOR SHALL PROTECT THE AREA OF THE REMAINS WITH AN APPROPRIATE MATERIAL. THE CONTRACTOR SHALL COOPERATE WITH THE POLICE OR DEPARTMENT OF LAND AND NATURAL RESOURCES IN THE INVESTIGATION, RECORDING, PRESERVATION, AND SALVAGE.

STANDARD TRAFFIC NOTES (WITHIN COUNTY ROW)

1. ALL TRAFFIC SIGNS AND PAVEMENT MARKINGS SHALL CONFORM TO THE LATEST AMENDED EDITIONS OF THE "MANUAL ON UNIFORM TRAFFIC CONTROL DEVICES", APPLICABLE SECTIONS OF PART 5 OF THE "STANDARD DETAILS FOR PUBLIC WORKS CONSTRUCTION", DATED SEPTEMBER, 1984, AND THE "2005 HAWAII STANDARD SPECIFICATIONS FOR ROAD AND BRIDGE CONSTRUCTION", UNLESS OTHERWISE INDICATED ON THE PLANS, SPECIFICATIONS, OR STANDARD TRAFFIC NOTES.

2. THE CONTRACTOR SHALL INSTALL PERMANENT OR TEMPORARY PAVEMENT MARKERS, STRIPING AND MARKINGS AS REQUIRED BY SECTION(S) 629 AND 755.05 OF THE "2005 HAWAII STANDARD SPECIFICATIONS FOR ROAD AND BRIDGE CONSTRUCTION", AND AS AMENDED. TO ENSURE PROPER LANE WIDTHS AND THE SAFE FLOW OF TRAFFIC, TEMPORARY STRIPING SHALL BE INSTALLED AS CLOSELY AS POSSIBLE TO THE FINAL STRIPING PLAN, BUT NOT IN A MANNER THAT WOULD OBSTRUCT PERMANENT STRIPING LAYOUT OPERATIONS.

   THE CONTRACTOR SHALL PROVIDE AND INSTALL ALL TRAFFIC SIGNS AND MARKINGS FOR ALL PROJECT-RELATED TEMPORARY TRAFFIC CONTROL PLANS. THE CONTRACTOR SHALL COORDINATE AND HIRE SPECIAL DUTY POLICE OFFICER(S) AS NEEDED TO PROVIDE TRAFFIC CONTROL WHILE WORKING WITHIN THE COUNTY RIGHT OF WAY.

3. THE CONTRACTOR SHALL INFORM THE TRAFFIC DIVISION AT LEAST SIX (6) WORKING DAYS PRIOR TO ANY WORK ON PAVEMENT MARKINGS OPERATIONS AND/OR SIGN INSTALLATIONS TO SCHEDULE A REVIEW AND APPROVAL OF THE STRIPING LAYOUT AND/OR SIGNING PLANS.

4. ALL PAVEMENT STRIPING SHALL BE WITH ALKYD BASED REFLECTIVE THERMOPLASTIC COMPOUND PAVEMENT MARKING AS SPECIFIED IN SECTION(S) 629 AND 755.05 OF THE HAWAII STANDARD SPECIFICATIONS FOR ROAD AND BRIDGE CONSTRUCTION, 2005 EDITION, AND AS AMENDED, ON ALL ROADWAYS. THE CONTRACTOR SHALL SUBMIT CERTIFICATE OF COMPLIANCE CERTIFYING THAT THE THERMOPLASTIC MATERIALS TO BE USED MEET THE CURRENT AASHTO M-247 (FOR GLASS BEADS) AND AASHTO M-249 (FOR STRIPING) SPECIFICATIONS.

5. REFLECTORIZED RAISED PAVEMENT MARKERS (RPM'S) SHALL BE REGULAR-SIZED MARKERS WITH APPROXIMATE DIMENSIONS OF 4"x4"x0.7". THE CONTRACTOR SHALL SUBMIT CERTIFICATE OF COMPLIANCE CERTIFYING THAT THE RPM'S TO BE USED MEET OR EXCEED THE CURRENT STATE OF HAWAII, DEPARTMENT OF TRANSPORTATION SPECIFICATIONS.

6. UPON COMPLETION OF ALL CONSTRUCTION WORK, INCLUDING, BUT NOT LIMITED TO THE FINAL PAVING OF THE ENTIRE PROJECT AREA AND OFF-SITE CONSTRUCTION, THE CONTRACTOR SHALL RESTRIPE ALL PAVEMENT MARKINGS WITHIN AND IN THE VICINITY OF THE CONSTRUCTION AREA AS APPROVED BY THE TRAFFIC DIVISION AND IN ACCORDANCE WITH ITEM 4 ABOVE. THE CONTRACTOR SHALL MAINTAIN ALL TEMPORARY PAVEMENT MARKINGS, PERMANENT PAVEMENT MARKINGS, AND ALL TRAFFIC SIGNS AND POSTS UNTIL THE PROJECT IS ACCEPTED BY THE COUNTY OF HAWAII.

   ALL TRAFFIC SIGNS AND POSTS WITHIN AND IN THE VICINITY OF THE CONSTRUCTION AREA THAT HAVE BEEN DAMAGED, REMOVED, OR ADVERSELY AFFECTED BY THE CONSTRUCTION WORK SHALL BE REPLACED BY THE CONTRACTOR ACCORDING TO ITEMS 7, 8 AND 9 BELOW AT NO COST TO THE COUNTY.

7. ALL TRAFFIC SIGNS AND POSTS SHALL MEET THE REQUIREMENTS OF THE COUNTY OF HAWAII STANDARD DETAIL T-1 EXCEPT THAT FLANGED CHANNEL POSTS AND OCTAGONAL POSTS WILL NOT BE ACCEPTABLE. SIGNS SHALL BE ON ALUMINUM SHEETING OF 0.080-INCH MINIMUM THICKNESS. SIGN POSTS SHALL BE 2" SQUARE TELESPAR TUBING NO. 20 F 12 OR EQUIVALENT WITH 2 1/4" SQUARE TELESPAR ANCHOR POST.

   FOR ALL COUNTY DEDICATED STREETS, THE CONTRACTOR SHALL PLACE A TRAFFIC DIVISION MAINTENANCE STICKER ON THE BACK OF EACH SINGLE-SIDED SIGN. STICKERS ARE TO BE ACQUIRED AT THE TRAFFIC DIVISION.

8. ALL TRAFFIC SIGNS SHALL BE HIGH INTENSITY RETROREFLECTIVE SHEETING, WITH TYPE IV FOR REGULATORY, WARNING, AND DIRECTIONAL SIGNS AND TYPE IX (FLUORESCENT YELLOW GREEN SHEETING) FOR PEDESTRIAN, SCHOOL, AND BICYCLE CROSSING SIGNS.

9. THE 2 1/4" SQUARE ANCHOR POST FOR SIGNS SHALL BE DRIVEN INTO THE GROUND, A.C. PAVEMENT OR CONCRETE SIDEWALK IN ACCORDANCE WITH THE PLANS. ALL DAMAGES TO THE SURROUNDING AREA SHALL BE REPAIRED TO ITS ORIGINAL CONDITION OR BETTER. BEFORE DRIVING INTO CONCRETE, A NEAT HOLE OF APPROXIMATELY 3" DIAMETER SHALL BE DRILLED THROUGH THE CONCRETE PRIOR TO THE INSTALLATION OF THE ANCHOR POST. IF DRIVING INTO THE CONCRETE OR A.C. PAVEMENT IS NOT POSSIBLE WITHOUT DAMAGE TO THE SURROUNDING CONCRETE OR A.C. PAVEMENT, A 12"x12" SQUARE SHALL BE SAW-CUT AND REMOVED PRIOR TO THE INSTALLATION OF THE ANCHOR POST AND THEN PATCHED, WITH HOT MIX TO MATCH THE EXISTING A.C. PAVEMENT, OR CONCRETE TO MATCH THE EXISTING CONCRETE SIDEWALK.

GRADING NOTES

1. ALL GRADING WORK SHALL BE IN ACCORDANCE WITH CHAPTER 10 – "EROSION AND SEDIMENTATION CONTROL" OF THE HAWAII COUNTY CODE AND AS SHOWN ON THE APPROVED PLAN. SHOULD A GRADING PERMIT BE REQUIRED, NO WORK SHALL COMMENCE UNTIL THE DEPARTMENT OF PUBLIC WORKS (DPW) ISSUES A GRADING PERMIT.

2. THE CONTRACTOR SHALL REMOVE ALL SILT AND DEBRIS DEPOSITED IN DRAINAGE FACILITIES, ROADWAYS AND OTHER AREAS RESULTING FROM HIS WORK. THE COSTS INCURRED FOR ANY NECESSARY REMEDIAL ACTION BY THE DPW SHALL BE PAYABLE BY THE CONTRACTOR.

3. THE CONTRACTOR, AT HIS OWN EXPENSE, SHALL KEEP THE PROJECT AND SURROUNDING AREAS FREE FROM DUST NUISANCES. THE WORK SHALL BE IN CONFORMANCE WITH THE AIR POLLUTION CONTROL RULES OF THE STATE DEPARTMENT OF HEALTH, HAR 11-60.1, FUGITIVE DUST.

4. ALL GRADING OPERATIONS SHALL BE PERFORMED IN CONFORMANCE WITH THE APPLICABL PROVISIONS OF THE HAWAII ADMINISTRATIVE RULES, TITLE 11, CHAPTER 55, WATER POLLUTION CONTROL AND CHAPTER 54, WATER QUALITY STANDARDS, AND TO THE EROSION AND SEDIMENTATION CONTROL STANDARDS AND GUIDELINES OF THE DEPARTMENT OF PUBLIC WORKS, COUNTY OF HAWAII.

5. THE CONTRACTOR SHALL INFORM THE DPW OF THE LOCATION OF THE DISPOSAL AND/OR BORROW SITE(S) REQUIRED FOR THIS PROJECT WHEN AN APPLICATION FOR A GRADING PERMIT IS MADE. THE DISPOSAL AND/OR BORROW SITE(S) MUST ALSO FULFILL THE REQUIREMENTS OF THE GRADING ORDINANCE.

6. NO GRADING WORK SHALL BE DONE ON SATURDAY, SUNDAY AND HOLIDAYS ANYTIME WITHOUT PRIOR APPROVAL FROM THE DEPARTMENT OF PUBLIC WORKS, PROVIDED SUCH GRADING WORK IS ALSO IN CONFORMANCE WITH THE COMMUNITY NOISE CONTROL STANDARDS CONTAINED IN THE HAWAII ADMINISTRATIVE RULES, TITLE 11, CHAPTER 46, "COMMUNITY NOISE CONTROL".

CIVIL DRAWING INDEX:

C-001	CIVIL GENERAL NOTES & CIVIL DRAWING INDEX
C-002	CIVIL GENERAL NOTES
C-003	CIVIL GENERAL NOTES & ABBREVIATIONS
C-004	EROSION & SEDIMENT CONTROL PLAN
C-100	SITE & UTILITIES PLAN
C-110	GRADING & DRAINAGE PLAN
C-200	CIVIL DETAILS
C-201	CIVIL DETAILS
C-202	CIVIL DETAILS
C-203	CIVIL DETAILS
C-204	CIVIL DETAILS
C-300	TRAFFIC CONTROL PLAN

REVISION NO.	SYM.	DESCRIPTION	SHT./OF	DATE	APPROVED

YVONNE M. TURRO
LICENSED PROFESSIONAL ENGINEER
No. 11144-C
HAWAII, U.S.A.

THIS LICENSE EXPIRES APRIL 30, 2024

SIGNATURE

THIS WORK WAS PREPARED BY ME OR UNDER MY SUPERVISION AND CONSTRUCTION OF THIS PROJECT WILL BE UNDER MY OBSERVATION. (OBSERVATION OF CONSTRUCTION AS DEFINED IN CHAPTER 16-115 OF THE HAWAII ADMINISTRATIVE RULES, DEPARTMENT OF COMMERCE AND CONSUMER AFFAIRS ENTITLED PROFESSIONAL ENGINEERS, ARCHITECTS, SURVEYORS AND LANDSCAPE ARCHITECTS).

STATE OF HAWAII
DEPARTMENT OF LAND AND NATURAL RESOURCES
ENGINEERING DIVISION

HAWAII DISTRICT LAND OFFICE
HILO, HAWAI`I

CIVIL GENERAL NOTES & CIVIL DRAWING INDEX

DESIGNED: AA	SUBMITTED:
DRAWN: YT	DATE: NOVEMBER 2022
CHECKED: YT	SCALE: N/A
APPROVED: CHIEF ENGINEER	DRAWING NO. C-001

Carty Chang
E-signed 2022-11-28 04:17PM HST
carty.s.chang@hawaii.gov
State of Hawaii
Chief Engineer

\\tlcg2019\Netshare\1. projects\42 - erskine\14224 - dlnr land div hq\DRAWINGS\NOTES.dwg - 10/28/2022 3:30 PM

WASTEWATER COLLECTION SYSTEM NOTES

GENERAL REQUIREMENTS

1. THE GENERAL REQUIREMENTS AND COVENANTS OF THE DEPARTMENT OF PUBLIC WORKS, COUNTY OF HAWAII (JULY 1972), THE STANDARD SPECIFICATIONS FOR PUBLIC WORKS CONSTRUCTION (APPLICABLE NON–WASTEWATER SECTIONS, SEPTEMBER 1986), THE STANDARD DETAILS FOR PUBLIC WORKS CONSTRUCTION, DEPARTMENTS OF PUBLIC WORKS, COUNTY OF HAWAII (APPLICABLE NON–WASTEWATER SECTIONS, SEPTEMBER 1984), WASTEWATER SYSTEM DESIGN STANDARDS, CITY AND COUNTY OF HONOLULU (JULY 2017), WASTEWATER SYSTEM STANDARD DETAILS, CITY AND COUNTY OF HONOLULU (JULY 2017) AND THE COUNTY OF HAWAII, DEPARTMENT OF ENVIRONMENTAL MANAGEMENT, WASTEWATER DIVISION (WWD) STANDARD DETAILS (WW–1 THRU WW–9, CURRENT VERSION) SHALL BE APPLICABLE AND INCORPORATED HEREIN UNLESS OTHERWISE NOTED.

2. BASIS OF BEARING (HORIZONTAL CONTROL): GOVERNMENT SURVEY TRIANGULATION STATION "HALAI."

3. BASIS OF ELEVATION (VERTICAL CONTROL): MONUMENT AT INTERSECTION OF PIILANI AND MANONO STREETS. ELEVATION OBTAINED FROM COUNTY OF HAWAII, PUBLIC WORKS DEPARTMENT (ELEVATION = 15.26 MEAN SEA LEVEL, BRASS PIN IN CONCRETE).

4. SURVEY CONTROL AND LAYOUT, WHEN REQUIRED, SHALL BE PERFORMED BY, OR UNDER THE DIRECT SUPERVISION OF, A PROFESSIONAL LAND SURVEYOR LICENSED IN THE STATE OF HAWAII.

5. THE CONTRACTOR SHALL PROCURE AND CONFORM TO ALL PERMITS AND LICENSES REQUIRED, PAY ALL ASSOCIATED CHARGES AND FEES AND GIVE ALL NOTICES NECESSARY AND INCIDENTAL TO THE DUE AND LAWFUL PROSECUTION OF THE WORK.

   A. THE CONTRACTOR SHALL PROCURE AND CONFORM TO A NATIONAL POLLUTANT DISCHARGE ELIMINATION SYSTEM (NPDES) PERMIT FROM THE STATE OF HAWAII, DEPARTMENT OF HEALTH, CLEAN WATER BRANCH FOR ANY PROJECT WHERE CONSTRUCTION ACTIVITIES WILL DISTURB ONE (1) ACRE OR MORE OF TOTAL LAND AREA OR WHERE DEWATERING IS REQUIRED.

   B. ALL STORMWATER POLLUTION PREVENTION MEASURES SHALL BE INSTALLED SO AS TO PREVENT STORMWATER RUNOFF, CONSTRUCTION WATER, FUELS, CHEMICALS, OR OTHER LIQUIDS BEING DIRECTED INTO OR ONTO ANY SANITARY SEWER FACILITIES WITHIN THE PROJECT LIMITS. BEST MANAGEMENT PRACTICES (BMPS) MAY INCLUDE, BUT SHALL NOT BE LIMITED TO, USE OF RAINSTOPPER MANHOLE INSERTS.

6. A MINIMUM HORIZONTAL SEPARATION OF 8 FEET BETWEEN WATER AND SEWER LINES ARE REQUIRED. IF NOT POSSIBLE, SECTION 2.4.12.B OF THE "WASTEWATER DESIGN STANDARDS, CITY AND COUNTY OF HONOLULU, JULY 2017" APPLIES.

7. A MINIMUM OF 18 INCH VERTICAL CLEARANCE AT WATER AND SEWER MAIN CROSSINGS WITH SEWER UNDERNEATH THE WATER IS REQUIRED. IF NOT POSSIBLE, SECTION 2.4.12.B OF THE "WASTEWATER SYSTEM DESIGN STANDARDS, CITY AND COUNTY OF HONOLULU, JULY 2017" APPLIES.

8. THE CONTRACTOR SHALL FURNISH ALL LABOR, MATERIALS, AND EQUIPMENT REQUIRED FOR THE COMPLETE INSTALLATION OF THE SUBJECT WORK UNLESS SPECIFICALLY NOTED OTHERWISE ON THE PLANS APPROVED BY THE WWD.

9. IT SHALL BE THE CONTRACTOR'S RESPONSIBILITY TO PERFORM ALL WORK NECESSARY TO COMPLETE CONSTRUCTION PER THE APPROVED PLANS AND SPECIFICATIONS AND SUCH INCIDENTALS AS MAY BE NECESSARY TO MEET APPLICABLE AGENCY REQUIREMENTS INCLUDING, BUT NOT LIMITED TO, OCCUPATIONAL SAFETY AND HEALTH ADMINISTRATION (OSHA) REGULATIONS, AND PROVIDE A COMPLETED PROJECT. ONLY PLANS APPROVED BY WWD SHALL BE USED FOR CONSTRUCTION OF, OR CONNECTION TO, THE COUNTY'S PUBLIC WASTEWATER SYSTEM. ANY ADDITIONS, DELETIONS, OR CHANGES TO THE WASTEWATER SYSTEM SHALL MEET THE WRITTEN APPROVAL OF THE COUNTY OF HAWAII, DEPARTMENT OF ENVIRONMENTAL MANAGEMENT, WASTEWATER DIVISION PRIOR TO STARTING THE REVISED WORK.

   A. THE CONTRACTOR SHALL MAINTAIN ONE COMPLETE SET OF APPROVED PLANS ON THE CONSTRUCTION SITE AT ALL TIMES WHERE HE SHALL RECORD THE SIZES, MATERIALS, STATION LOCATIONS AND ELEVATIONS OF ALL EXISTING UTILITIES ENCOUNTERED. THESE FIELD RECORD DRAWINGS SHALL BE KEPT CONTINUOUSLY UP TO DATE AND SHALL BE AVAILABLE FOR INSPECTION BY THE WWD ON REQUEST.

10. INSPECTIONS SHALL BE REQUIRED FOR ALL WORK WHICH INVOLVES THE WWD'S SEWER MAINS, LATERALS, CLEANOUTS, AND ALL NEW SEWER CONSTRUCTION TO BE DEDICATED TO THE COUNTY OF HAWAII. CALL THE WASTEWATER DIVISION AT (808)961–8338 DURING NORMAL BUSINESS HOURS (7:00 A.M. TO 3:30 P.M., MONDAY THROUGH FRIDAY, EXCEPT COUNTY OF HAWAII HOLIDAYS) AT LEAST TWO (2) WORKING DAYS IN ADVANCE TO SCHEDULE AN INSPECTION.

   A. WWD INSPECTION SHALL BE PERFORMED PRIOR TO BACKFILLING OR COVERING THE PIPE AND ASSOCIATED APPURTENANCES IN PUBLIC EASEMENTS OR RIGHTS–OF–WAY, BEFORE PRIVATE SEWER OR LATERALS ARE CONNECTED TO THE PUBLIC SEWER SYSTEM, AND AFTER ALL ASSOCIATED PLUMBING WORK ON PRIVATE PROPERTY IS COMPLETE, IN ACCORDANCE WITH THE PLUMBING PERMIT.

   B. WHEN WWD DETERMINES THROUGH INSPECTION THAT MATERIAL, EQUIPMENT OR WORKMANSHIP DO NOT MEET REQUIREMENTS, THE CONTRACTOR WILL BE GIVEN WRITTEN NOTICE OF NONCOMPLIANCE. IMMEDIATE CORRECTION OF THE DEFICIENCIES SHALL BE ADDRESSED BY THE CONTRACTOR WITH THE WWD ENGINEER AND/OR THEIR REPRESENTATIVE.

   C. ANY INSPECTION BY WWD, HAWAII COUNTY OR OTHER AGENCIES SHALL NOT, IN ANY WAY, RELIEVE THE CONTRACTOR FROM ANY OBLIGATION TO PERFORM THE WORK IN STRICT COMPLIANCE WITH APPLICABLE REGULATIONS, CODES, CONTRACT DOCUMENTS, PLANS, SPECIFICATIONS, OR GOVERNING AGENCY REQUIREMENTS.

WASTEWATER COLLECTION SYSTEM NOTES (CONT.)

GENERAL REQUIREMENTS (CONT.)

11. SEWER WORK SHALL BE SCHEDULED SUCH THAT WORK SHALL NOT BE PERFORMED ON SATURDAYS, SUNDAYS OR COUNTY OF HAWAII HOLIDAYS. IF SUCH WORK DICTATES PERFORMANCE ON THESE NON–WORK DAYS, OR AFTER NORMAL HOURS OF OPERATION (3:30 PM TO 7:00 AM), THE CONTRACTOR SHALL BE RESPONSIBLE FOR PAYMENT OF OVERTIME CHARGES TO THE WWD.

12. THE CONTRACTOR SHALL NOTIFY THE HAWAII ONE CALL CENTER OF ANY PLANNED EXCAVATION ON PUBLIC OR PRIVATE PROPERTY AT LEAST FIVE WORKING DAYS, BUT NOT MORE THAN TWENTY–EIGHT CALENDAR DAYS, PRIOR TO COMMENCING SUCH EXCAVATION (IN ACCORDANCE WITH HRS 269 E–7). CALL 1–866–423–7287 (OR 811). ERRORS IN ONE CALL'S SANITARY SEWER LOCATES SHALL BE REPORTED IMMEDIATELY TO THE WWD AT (808)961–8338.

13. LOCATIONS AND DESCRIPTIONS OF EXISTING UTILITIES SHOWN ON THE PLANS ARE COMPILED FROM AVAILABLE RECORDS AND/OR FIELD SURVEY. THE ENGINEER AND UTILITY PROVIDERS DO NOT GUARANTEE THE ACCURACY OR COMPLETENESS OF SUCH RECORDS. THE CONTRACTOR SHALL FIELD VERIFY LOCATIONS, SIZES, MATERIALS AND DEPTHS OF ALL EXISTING UTILITIES WHERE PROPOSED FACILITIES CROSS.

14. THE CONTRACTOR SHALL FIELD VERIFY EXISTING SANITARY SEWER LOCATIONS, ELEVATIONS, AND MATERIALS WITHIN THE PROJECT LIMITS PRIOR TO CONSTRUCTION. POT–HOLING MAY BE REQUIRED FOR SUCH VERIFICATION.

15. THE CONTRACTOR SHALL BE RESPONSIBLE FOR EXPOSING POTENTIAL UTILITY CONFLICTS FAR ENOUGH AHEAD OF CONSTRUCTION TO MAKE NECESSARY LINE AND GRADE MODIFICATIONS WITHOUT DELAYING THE WORK.

16. ALL EXISTING UTILITIES EXCEPT THOSE SPECIFICALLY DESIGNATED FOR ABANDONMENT OR REMOVAL ON THE APPROVED PLANS, INCLUDING WASTEWATER LINE(S), WHETHER OR NOT SHOWN ON THE PLANS, SHALL BE PROTECTED AND REPAIRED BY THE CONTRACTOR IF DAMAGED DURING CONSTRUCTION. THE CONTRACTOR SHALL LEAVE EXISTING FACILITIES IN AN EQUAL TO OR BETTER THAN ORIGINAL CONDITION. THE CONTRACTOR SHALL PAY ALL ASSOCIATED EXPENSES: IN THE EVENT OF DAMAGE TO EXISTING UTILITY FACILITIES OTHER THAN SANITARY SEWER, THE CONTRACTOR SHALL IMMEDIATELY NOTIFY THE UTILITY SERVICE PROVIDER. IN THE EVENT OF DAMAGE TO EXISTING SANITARY SEWER FACILITIES, THE CONTRACTOR SHALL IMMEDIATELY NOTIFY THE WWD AT (808)961–8338.

17. THE CONTRACTOR SHALL NOTIFY AND COORDINATE WITH PRIVATE UTILITIES FOR ADJUSTMENT TO OR RELOCATION OF POWER POLES, VAULTS, ETC. TO AVOID CONFLICT WITH COUNTY SEWER STRUCTURES, LINES AND ASSOCIATED APPURTENANCES.

18. EXPOSED ENDS OF SEWER LINES THAT ARE ABANDONED OR TO BE ABANDONED IN PLACE SHALL BE CAPPED OR PLUGGED WITH CONCRETE FOR A MINIMUM LENGTH EQUAL TO TWO TIMES THE DIAMETER OF THE ABANDONED PIPE AND INTERFERING PORTIONS REMOVED BY THE CONTRACTOR TO THE EXTENT NECESSARY TO ACCOMPLISH THE WORK, UNLESS OTHERWISE SPECIFIED.

19. THE CONTRACTOR SHALL MAINTAIN ACCESS TO ALL SANITARY SEWER STRUCTURES AND MANHOLES AT ALL TIMES.

20. BYPASSING OR SPILLING OF SEWAGE TO THE GROUND, DRAINAGE SYSTEM OR STATE WATERS IS PROHIBITED. IN SUCH CASES, THE CONTRACTOR SHALL IMMEDIATELY CALL THE WWD AT (808)961–8338, TAKE IMMEDIATE ACTION TO CONTAIN THE SEWAGE, AND PAY PENALTIES, INCLUDING LEGAL FEES AND OTHER COSTS RELATED TO THE BYPASS AND/OR SPILL.

21. THE CONTRACTOR SHALL BE IN PERSON ON THE JOB SITE OR BE REPRESENTED ON THE JOB SITE BY A RESPONSIBLE AGENT WITH AUTHORITY TO ACT FOR THE CONTRACTOR IN CONNECTION WITH THIS PROJECT AT ALL TIMES.

22. THE CONTRACTOR SHALL, AT ALL TIMES DURING THE WORK, KEEP THE PREMISES CLEAN AND ORDERLY. PUBLIC STREETS AND RIGHTS–OF–WAY SHALL BE KEPT CLEAN OF MUD, DUST AND DEBRIS. THE CONTRACTOR SHALL ADEQUATELY WATER DISTURBED AREAS ON–SITE FOR DUST ABATEMENT, AS NEEDED. UPON COMPLETION OF THE WORK, THE CONTRACTOR SHALL REPAIR ALL DAMAGE CAUSED BY EQUIPMENT AND LEAVE THE PROJECT FREE OF RUBBISH AND EXCESS MATERIALS OF ANY KIND. DROPPING OR WASHING DEBRIS OR RUBBISH OF ANY KIND INTO THE SANITARY SEWER SYSTEM IS PROHIBITED.

EXISTING CONDITION ASSESSMENT

1. THE CONTRACTOR SHALL KEEP ALL PROJECT ACTIVITIES WITHIN THE PROJECT AREA. IN THE EVENT THAT A PREVIOUSLY UNKNOWN ARCHAEOLOGICAL FEATURE, HISTORIC PROPERTY, OR HUMAN REMAINS (INCLUDING HUMAN SKELETAL REMAINS, CREMATIONS, CEREMONIAL OBJECTS, FUNERARY OBJECTS, BURIAL GOODS, ETC.) ARE EXPOSED BY CONSTRUCTION, THE CONTRACTOR SHALL CEASE WORK IN THE VICINITY IMMEDIATELY AND NOTIFY THE WWD, STATE OF HAWAII HISTORIC PRESERVATION DIVISION (SHPD), THE APPROPRIATE MEDICAL EXAMINER OR CORONER, AND THE APPROPRIATE POLICE DEPARTMENT, OF THE DISCOVERY. THE CONTRACTOR SHALL PROTECT THE AREA OF THE REMAINS WITH AN APPROPRIATE MATERIAL. THE CONTRACTOR SHALL COOPERATE WITH THE POLICE OR DEPARTMENT OF LAND AND NATURAL RESOURCES IN THE INVESTIGATION, RECORDING, PRESERVATION, AND SALVAGE.

SEWER SYSTEM REQUIREMENTS

1. SEWER MAIN PIPE AND FITTINGS: GRAVITY MAIN

   A. ALL SANITARY SEWER PIPE AND FITTINGS SHALL BE PVC SDR–26 BELL AND SPIGOT IN CONFORMANCE WITH THE LATEST VERSION OF ASTM D3034, UNLESS OTHERWISE NOTED ON THE APPROVED PLANS.

   B. LAYING OF PIPE SHALL GENERALLY COMMENCE AT THE LOWEST POINT, THE BELL END FACING UPSTREAM, REGARDLESS OF THE STATIONING SHOWN ON THE PLANS. PIPE SHALL BE FITTED TOGETHER AND MATCHED WITH GASKETS PROPERLY SEATED SO THAT WHEN LAID IT WILL FORM A UNIFORM AND SMOOTH INVERT.

WASTEWATER COLLECTION SYSTEM NOTES (CONT.)

SEWER MAIN PIPE AND FITTINGS (CONT.)

   C. REFER TO THE DRAWINGS FOR DETAILED REQUIREMENTS FOR ALL CONNECTIONS TO EXISTING SANITARY SEWER PIPE. DETAILS SHALL BE PROVIDED TO AND APPROVED BY WWD.

   D. THE INTERIOR OF THE SEWER PIPE SHALL BE CLEARED OF ALL DEBRIS AND FOREIGN MATERIALS AS THE WORK PROGRESSES. BEFORE LEAVING THE WORKPLACE FOR THE NIGHT, EXPOSED ENDS OF SEWER PIPE SHALL BE CLOSED WITH TEMPORARY COVERS TO PREVENT EARTH AND DEBRIS FROM ENTERING THE PIPE.

   E. BECAUSE OF THE NATURE OF PLASTIC PIPE AND FITTINGS, THE CONTRACTOR IS CAUTIONED TO EXERCISE CARE IN HANDLING, LOADING, UNLOADING, AND STORING TO AVOID DAMAGE.

      I. KEEP PIPE AND GASKETS CLEAN, AWAY FROM OIL, GREASE, EXCESSIVE HEAT AND ELECTRIC MOTORS, WHICH PRODUCE OZONE, AND PROTECTED FROM DIRECT SUNLIGHT AND TEMPERATURE CHANGES IN PROLONGED EXPOSURE TO AVOID CRACKING.

      II. HEAVY IMPACT MAY CAUSE A SLIGHT LONGITUDINAL INDENTATION ON THE OUTSIDE OF THE PIPE AND A CRACK ON THE INSIDE. THIS WILL RESULT IN A SPLIT AS SOON AS THE PIPE IS PLACED UNDER LOADING. ANY PIPE THAT HAS BEEN IMPACTED SHALL BE EXAMINED CLOSELY FOR THIS TYPE OF DAMAGE.

2. TRENCHING, PIPE BEDDING, AND BACKFILL

   A. THE CONTRACTOR SHALL HAVE APPROPRIATE EQUIPMENT ON–SITE TO PRODUCE A DRY, FIRM, SMOOTH, UNDISTURBED SUBGRADE AT THE TRENCH BOTTOM THAT IS TRUE TO LINE AND GRADE. THE TRENCH BOTTOM SHALL BE FREE OF LOOSE MATERIALS OR TOOTH GROOVES FOR THE ENTIRE TRENCH WIDTH PRIOR TO PLACING PIPE BEDDING MATERIAL.

   B. THE CONTRACTOR SHALL FURNISH AND INSTALL SUFFICIENT TRENCH BOXES, SHORING, SHEETING, OR BRACING TO ENSURE THE SAFETY OF WORKMEN AND THE PUBLIC, PROTECT THE WORK, AND PROTECT EXISTING FACILITIES.

      I. SHORING, SHEETING, AND BRACING SHALL COMPLY WITH OSHA RULES, ORDERS AND REGULATIONS.

      II. WHERE REQUIRED BY OSHA, THE CONTRACTOR SHALL BE REQUIRED TO PROVIDE DRAWINGS AND/OR CALCULATIONS FOR SPECIALLY DESIGNED BRACING AND SHORING, PREPARED AND STAMPED BY A HAWAII REGISTERED PROFESSIONAL ENGINEER, TO THE WWD A MINIMUM OF FIVE (5) WORKING DAYS PRIOR TO BEGINNING ASSOCIATED EXCAVATION. THE CONTRACTOR SHALL BE RESPONSIBLE FOR THE ADEQUACY OF ALL SHEETING, SHORING AND BRACING AND COMPLIANCE WITH THE LAW. FAILURE OF THE INSPECTOR TO SUSPEND THE WORK OR NOTIFY THE CONTRACTOR OF ANY INADEQUACY OF SHEETING, SHORING, BRACING OR NONCOMPLIANCE WITH THE LAW SHALL NOT RELIEVE THE CONTRACTOR OF THIS RESPONSIBILITY.

      III. THE CONTRACTOR SHALL FURNISH AND MAINTAIN SHORING, SHEETING AND BRACING UNTIL AFTER THE PIPELINE AND APPURTENANCES HAVE BEEN INSTALLED AND THE INSPECTOR HAS APPROVED THE PLACEMENT OF SUFFICIENT BACKFILL. THE CONTRACTOR SHALL PROVIDE ADEQUATE SAFETY MEASURES TO ALLOW FOR ACCESS BY THE INSPECTOR OR TESTING PERSONNEL TO PERFORM COMPACTION TESTING AND INSPECTION OF THE LIFTS OF BACKFILL PLACED.

   C. NO TRENCHES IN ROADS OR DRIVEWAYS SHALL BE LEFT OPEN OVERNIGHT. ALL SUCH TRENCHES SHALL BE PLATED OR CLOSED AND NORMAL TRAFFIC FLOW RESTORED BEFORE THE END OF EACH WORK DAY.

      I. THE STEEL TRENCH PLATES SHALL BE CAPABLE OF SUPPORTING HS–20 LOADING.

      II. THE PLATES MUST EXTEND BEYOND THE EDGE OF THE TRENCH WALL FAR ENOUGH TO ADEQUATELY SUPPORT HS–20 TRAFFIC LOADS. IN NO CASE SHALL THE PLATES EXTEND LESS THAN TWELVE (12) INCHES BEYOND THE TRENCH WALL.

      III. EACH PLATE MUST BE FULLY SUPPORTED AROUND ITS PERIMETER TO PREVENT WOBBLING OR ROCKING.

      IV. THE PLATES SHALL BE SECURED TO PREVENT ANY MOVEMENT.

      V. TRENCHES AND EXCAVATIONS BENEATH THE PLATES SHALL BE ADEQUATELY SHORED AND BRACED TO WITHSTAND HS–20 TRAFFIC LOADS.

      VI. TEMPORARY PAVING OR COLD–MIX ASPHALTIC CONCRETE (CUTBACK) SHALL BE PLACED AND CONTINUOUSLY MAINTAINED AROUND ALL OUTSIDE EDGES OF THE TRENCH PLATES UNTIL THEY ARE REMOVED.

   D. TRENCHES SHALL BE PROPERLY BACKFILLED AND COMPACTED AS SHOWN ON THE APPROVED PLANS.

Eric S. Takamura — 8/24/2020

WASTEWATER DIVISION CHIEF — DATE

WASTEWATER COLLECTION SYSTEM NOTES (CONT.)

SEWER SYSTEM REQUIREMENTS (CONT.)

   E. PIPE BEDDING SHALL BE CLASS B 3/4" AGGREGATE BASE COURSE PLACED WITHIN THE DRY TRENCH, AT NOT LESS THAN 4 INCHES BUT NOT MORE THAN 5 INCHES IN COMPACTED THICKNESS. BEDDING SHALL BE COMPACTED TO 95 PERCENT MAXIMUM DRY DENSITY, UNLESS OTHERWISE NOTED ON PLANS, TO AVOID STRESS CONCENTRATIONS AND ASSOCIATED IRREGULAR PIPE DEFORMATIONS. RECESSES CONSTRUCTED IN THE BEDDING, FOLLOWED BY HAND COMPACTION OF BACKFILL AROUND THE BELLS, WILL PROVIDE CONTINUOUS LONGITUDINAL SUPPORT AND UNIFORM BEARING BELOW THE PIPE JOINTS.

   F. THE REMAINDER OF THE PIPE EMBEDMENT SHALL ALSO BE CLASS B 3/4" AGGREGATE BASE COURSE, PROPERLY PLACED, IN LIFTS NOT TO EXCEED 6", AROUND THE PIPE HAUNCHES AND EXTENDING TO A MINIMUM OF 12" COMPACTED THICKNESS OVER THE TOP OF THE PIPE. PIPE ZONE EMBEDMENT SHALL BE COMPACTED TO 95 PERCENT MAXIMUM DRY DENSITY, UNLESS OTHERWISE NOTED ON PLANS, TO PROVIDE ADEQUATE SIDE SUPPORT AND ENSURE THE PIPE'S FULL STRENGTH IS ACHIEVED WHILE AVOIDING PIPE DEFLECTION, VERTICAL AND LATERAL DISPLACEMENT.

   G. CONTROLLED LOW–STRENGTH MATERIAL (CLSM) SHALL BE USED AS THE FINAL TRENCH BACKFILL UNLESS OTHERWISE NOTED ON THE PLANS OR APPROVED IN WRITING BY THE WWD ENGINEER.

   H. COMPACTION TESTING FOR BEDDING AND EMBEDMENT MATERIALS FOR SEWER MAIN INSTALLATION SHALL BE PERFORMED BY AN INDEPENDENT TESTING AND QUALITY CONTROL LABORATORY. COMPACTION TEST FREQUENCY SHALL BE A MINIMUM OF ONE (1) TEST PER 150 LINEAL FEET PER LIFT OR A FRACTION THEREOF ON ALTERNATING SIDES OF THE PIPE OR STRUCTURE. THE ENGINEER RESERVES THE RIGHT TO INCREASE OR DECREASE THE FREQUENCY OF COMPACTION TESTING TO MATCH FIELD CONDITIONS. TEST RESULTS SHALL BE SUBMITTED TO THE WWD ENGINEER FOR EVALUATION AS PART OF THE FINAL ACCEPTANCE PROCESS.

3. SEWER MANHOLES AND APPURTENANCES

   A. ALL PRECAST CONCRETE SEWER MANHOLES SHALL CONFORM TO THE LATEST VERSION OF ASTM C478.

   B. ALL SEWER MANHOLE BASE, SECTIONS, CONE, FLAT TOP, BENCHES, AND CHANNELS SHALL INCLUDE A CONCRETE WATERPROOFING, PROTECTION, AND IMPROVEMENT ADMIXTURE. ADMIXTURE SHALL BE XYPEX ADMIX C–1000 OR APPROVED EQUAL PRODUCT. DOSAGE SHALL BE PER MANUFACTURER'S INSTRUCTIONS AND SHALL NOT BE LESS THAN 3% OF THE WEIGHT OF THE PORTLAND CEMENT FRACTION OF THE MIX.

   C. ALL DROP SEWER MANHOLES, TRANSITIONAL SEWER MANHOLES (RECEIVING MANHOLE AND THE NEXT TWO MANHOLES DOWNSTREAM FROM THE DISCHARGE OF A FORCE MAINS), AND SEWER MANHOLES WITH CONNECTING PIPES GREATER THAN OR EQUAL TO 12 INCHES NOMINAL DIAMETER SHALL ALSO BE LINED WITH A PVC LINER, DURA–PLATE OR AN APPROVED EQUAL PRODUCT.

   D. ALL CONSTRUCTED (CAST–IN–PLACE) SEWER MANHOLE BENCHES AND CHANNELS SHALL BE COATED USING XYPEX MEGAMIX I OR AN APPROVED EQUAL PRODUCT.

   E. SEWER MANHOLE CHANNELS, INCLUDING THOSE AT CONNECTIONS TO EXISTING MANHOLES, SHALL PROVIDE A SMOOTH TRANSITION BETWEEN INLET AND OUTLET SEWERS. THE ANGLE BETWEEN THE INLET AND OUTLET SHALL BE A MINIMUM OF 90 DEGREES.

   F. UNLESS OTHERWISE APPROVED OR NOTED, ALL MANHOLES FOR CONNECTING SEWER LINES LESS THAN OR EQUAL TO 12–INCH NOMINAL DIAMETER SHALL BE PROVIDED WITH "ECCENTRIC" CONE SECTIONS WITH TYPE SA FRAMES AND COVERS (STD. DETAIL S–22).

   G. UNLESS OTHERWISE APPROVED OR NOTED, ALL MANHOLES WITH CONNECTING SEWER LINES GREATER THAN 12–INCH NOMINAL DIAMETER OR LESS THAN 5 FEET DEEP SHALL BE PROVIDED WITH A FRAME AND COVER WITH A MINIMUM 48" CLEAR OPENING. THE 52–INCH COVER SHALL HAVE A SMALLER 25–5/16–INCH COVER INSTALLED FOR ROUTINE MAINTENANCE AND INSPECTION. THE SMALLER COVER SHALL BE PROVIDED WITH RECESSED STAINLESS STEEL BOLTS TO ALLOW SECURING. PERMANENT ALIGNMENT MARKS (MATCH MARKS) SHALL BE PROVIDED FOR THE BOLTS TO FACILITATE REINSTALLATION OF THE COVER. THE FRAME AND COVER SHALL BE AN ECCENTRIC CONFIGURATION, D&L FOUNDRY & SUPPLY; MODEL A–1428 OR APPROVED EQUAL.

REVISION NO.	SYM.	DESCRIPTION	SHT./OF	DATE	APPROVED

YVONNE M. TURRO — LICENSED PROFESSIONAL ENGINEER — No. 11144–C — HAWAII, U.S.A.

THIS LICENSE EXPIRES APRIL 30, 2024

SIGNATURE

THIS WORK WAS PREPARED BY ME OR UNDER MY SUPERVISION AND CONSTRUCTION OF THIS PROJECT WILL BE UNDER MY OBSERVATION. (OBSERVATION OF CONSTRUCTION AS DEFINED IN CHAPTER 16–115 OF THE HAWAII ADMINISTRATIVE RULES, DEPARTMENT OF COMMERCE AND CONSUMER AFFAIRS ENTITLED PROFESSIONAL ENGINEERS, ARCHITECTS, SURVEYORS AND LANDSCAPE ARCHITECTS).

STATE OF HAWAII
DEPARTMENT OF LAND AND NATURAL RESOURCES
ENGINEERING DIVISION

HAWAII DISTRICT LAND OFFICE
HILO, HAWAI`I

CIVIL GENERAL NOTES

DESIGNED: AA	SUBMITTED:
DRAWN: YT	DATE: NOVEMBER 2022
CHECKED: YT	SCALE: N/A
APPROVED: CHIEF ENGINEER	DRAWING NO. C-002

Carty Chang
E-signed 2022-11-28 04:17PM HST
carty.s.chang@hawaii.gov
State of Hawaii
Chief Engineer

\\tlcg2019\Netshare\1. projects\42 - erskine\14224 - dlnr land div hq\DRAWINGS\NOTES.dwg - 10/28/2022 3:30 PM

WASTEWATER COLLECTION SYSTEM NOTES (CONT.)

SEWER SYSTEM REQUIREMENTS (CONT.)

3. SEWER MANHOLES AND APPURTENANCES (CONT.)

H. A FLEXIBLE PIPE TO MANHOLE CONNECTOR SHALL BE USED WHENEVER A PIPE PENETRATES INTO A PRECAST CONCRETE MANHOLE OR STRUCTURE. CONNECTIONS SHALL BE WATER–TIGHT AND SHALL PROVIDE FOR SMOOTH FLOW INTO AND THROUGH THE MANHOLE WITH NO PONDING.

I. NEW SEWER PIPE CONNECTIONS TO NEW MANHOLES SHALL BE WITH AN APPROVED CAST–IN–PLACE MANHOLE PIPE ADAPTER (A–LOK, ECONOSEAL, OR APPROVED EQUAL PRODUCT).

II. EXISTING SEWER PIPE CONNECTIONS TO NEW MANHOLES SHALL BE WITH AN APPROVED MANHOLE PIPE ADAPTER (A–LOK FIELD SLEEVE OR APPROVED EQUAL PRODUCT).

III. SEWER PIPE CONNECTIONS TO EXISTING MANHOLES SHALL BE WITH AN APPROVED MANHOLE PIPE ADAPTER (A–LOK FIELD SLEEVE OR APPROVED EQUAL PRODUCT). OPENINGS FOR NEW CONNECTIONS TO EXISTING MANHOLES SHALL BE CORE–DRILLED AND SURFACE ROUGHENED. SMALL CHIPPING HAMMERS OR SIMILAR LIGHT TOOLS MAY BE USED TO ENLARGE EXISTING OPENINGS OR SHAPE CHANNELS IN EXISTING MANHOLES. USE OF PNEUMATIC JACKHAMMERS OR OTHER HEAVY TOOLS WHICH COULD DAMAGE OR CRACK THE MANHOLE BASE IS PROHIBITED.

I. ONE HAND GRAB RUNG AT THE TOP OF THE MANHOLE SHALL BE STAINLESS STEEL TYPE "SA" PER DPW STANDARD DETAIL S–42. SEWER MANHOLE RUNGS SHALL BE TYPE "SP" COPOLYMER POLYPROPYLENE PLASTIC, BOWCO INDUSTRIES INC./MEADOW BURKE PART NO. 93810R IN ACCORDANCE WITH WASTEWATER STANDARD DETAIL WW–7.

J. RUNGS AND ECCENTRIC CONES OR COVERS SHALL NOT BE ALIGNED ABOVE FLOW LINES. THEY SHALL BE PLACED ON THE SIDE OF THE MANHOLE WITH THE LARGEST SHELF.

K. SEWER MANHOLES LOCATED IN UNPAVED AREAS SHALL BE PROVIDED A REINFORCED 3000 PSI CLASS "A" CONCRETE COLLAR. THE REINFORCED CONCRETE COLLAR SHALL BE A MINIMUM OF 12" THICK, AND EXTEND A MINIMUM OF 12" BEYOND THE FRAME AND COVER. REINFORCEMENT SHALL CONSIST OF AT LEAST ONE (1) #4 BAR PLACED AT LEAST 3" CLEAR FROM THE EDGE OF CONCRETE AND WRAPPED AROUND THE MANHOLE TOP SECTION (WITH AT LEAST 15" LAP), CENTERED VERTICALLY IN THE COLLAR.

L. ALL MANHOLE SECTIONS SHALL BE JOINED USING RAM–NEK RN103 OR APPROVED EQUAL.

4. SEWER LATERAL PIPE AND FITTINGS

A. NEW SEWER LATERALS AND CLEANOUTS SHALL BE 6" DIAMETER, PVC SDR26 PIPE AND FITTINGS.

B. SEWER CLEANOUTS SHALL BE LOCATED IN THE COUNTY RIGHT–OF–WAY OR EASEMENT WITHIN ONE FOOT OF THE PROPERTY LINE OR BOUNDARY. THE CLEANOUT SHALL BE EASILY ACCESSIBLE (I.E. NOT BE BURIED OR LOCATED UNDER OR CLOSE TO ROCK WALLS, FENCES OR OTHER OBSTRUCTIONS).

I. NEW HIGH FLOW OR/AND HIGH FOG (FAT, OIL, AND GREASE) POTENTIAL DISCHARGERS SHALL INSTALL A SEWER MANHOLE IN LIEU OF A CLEANOUT AT THE PROPERTY LINE.

C. SEWER LATERAL CONNECTIONS TO AN EXISTING SANITARY MAIN SHALL BE MADE WITH A WYE CONFIGURED FLEXIBLE SADDLE (FERNCO TSW–6 OR APPROVED EQUAL) ROTATED 45 DEGREES ABOVE THE MAIN SPRING LINE UNLESS OTHERWISE DIRECTED BY THE WWD.

I. SEWER LATERAL SADDLE CONNECTIONS AND CORED SEWER MAIN ENTRY, WHEN DIRECTED BY THE WWD, SHALL PROVIDE A SMOOTH TRANSITION AND UNOBSTRUCTED FLOW TO THE MAIN. SADDLES SHALL COMPLETELY OVERLAY THE CORED AREA ON THE MAIN. SADDLES SHALL BE SECURED TO THE MAIN WITH STAINLESS STEEL STRAPS AND JACKETED WITH CLASS B REINFORCED CONCRETE IN ACCORDANCE WITH DPW STANDARD DETAIL S–5. THE REINFORCED CONCRETE JACKET SHALL COMPLETELY ENCASE THE EXISTING SEWER MAIN, BE MINIMUM OF 6" THICK, AND EXTEND A MINIMUM OF 6" EACH WAY BEYOND THE SADDLE.

5. SEWER LINE ACCEPTANCE TESTS

A. THE CONTRACTOR SHALL PROVIDE AND PAY FOR ALL MATERIALS, EQUIPMENT, AND FACILITIES NECESSARY FOR TESTING ALL UTILITY BACKFILL, PIPE AND STRUCTURES IN ACCORDANCE WITH THESE PLANS AND COUNTY STANDARD SPECIFICATIONS AND REQUIREMENTS.

B. ALL NEWLY INSTALLED SEWER MAINS AND LATERALS ARE SUBJECT TO LEAKAGE TESTING AND CCTV INSPECTION PRIOR TO FINAL ACCEPTANCE AS DIRECTED BY THE WWD.

C. LEAKAGE TESTING SHALL BE ACCOMPLISHED IN ACCORDANCE WITH SECTION 21.3 D OF THE STANDARD SPECIFICATIONS FOR PUBLIC WORKS CONSTRUCTION, SEPTEMBER 1986. ALL COSTS FOR SUCH TESTING SHALL BE BORNE BY THE CONTRACTOR.

D. DEFLECTION TESTING WHEN REQUIRED BY WWD, SHALL BE ACCOMPLISHED IN ACCORDANCE WITH SECTION 21.3 E OF THE STANDARD SPECIFICATIONS FOR PUBLIC WORKS CONSTRUCTION, SEPTEMBER 1986. ALL COSTS FOR SUCH TESTING SHALL BE BORNE BY THE CONTRACTOR.

WASTEWATER COLLECTION SYSTEM NOTES (CONT.)

SEWER SYSTEM REQUIREMENTS (CONT.)

5. SEWER LINE ACCEPTANCE TESTS (CONT.)

E. AN INITIAL CCTV INSPECTION WILL BE PERFORMED BY THE COUNTY AT NO COST TO THE CONTRACTOR SUBJECT TO THE CONDITIONS BELOW.

I. THE CONTRACTOR SHALL OBTAIN A COPY OF THE SEWER LINE ACCEPTANCE TEST CRITERIA FROM THE WWD PRIOR TO REQUESTING OR SCHEDULING A CCTV INSPECTION.

II. THE CONTRACTOR SHALL ASSIST THE COUNTY IN THE PERFORMANCE OF THE CCTV INSPECTION, SHALL BE RESPONSIBLE FOR ALL TRAFFIC CONTROL REQUIREMENTS DURING CCTV INSPECTION, AND SHALL BE RESPONSIBLE FOR CLEANING AND REMOVING ALL DIRT, GRIT, ROCK, DEBRIS AND FOREIGN MATERIALS FROM THE PIPES AND MANHOLES PRIOR TO CCTV INSPECTION. IN THE EVENT THAT PIPES OR MANHOLES ARE FOUND TO HAVE BEEN INADEQUATELY CLEANED, THE COUNTY WILL TERMINATE THE CCTV INSPECTION. THE COST OF SUBSEQUENT CCTV INSPECTION(S) WILL BE CHARGED TO THE CONTRACTOR.

III. THE CONTRACTOR SHALL HAVE A SUPERVISORY REPRESENTATIVE PRESENT DURING PERFORMANCE OF THE CCTV INSPECTION.

IV. IF THE CCTV INSPECTION REVEALS CONDITIONS SUCH AS DENTS, OUT–OF–ROUND, AND ETC. THE WORK SHALL BE CONSIDERED DEFECTS AND SUBJECT TO REPAIR BY THE CONTRACTOR.

V. IF THE CCTV INSPECTION REVEALS PIPE SAGS EXCEEDING THE SEWER LINE ACCEPTANCE TEST CRITERIA BELOW THEY SHALL BE CONSIDERED DEFECTS AND SHALL BE RECONSTRUCTED FOR THE ENTIRE RUN OF THE PIPING FROM STRUCTURE–TO–STRUCTURE ACCORDING TO THE FOLLOWING TABLE:

SAG TOLERANCES		
PIPE SLOPE	NOM. PIPE SIZE	COMPLIES W/ SPECIFICATIONS
< 0.4%	6"	< ½"
	8"	< ½"
	10"	< 1"
	12"	< 1"
	> 12"	< 1"
0.4% TO 0.7%	6"	< ½"
	8"	< ½"
	10"	< 1"
	12"	< 1"
	> 12"	< 1"
> 0.7%	6"	< 1"
	8"	< 1"
	10"	< 1–½"
	12"	< 1–½"
	> 12"	< 1–½"

VI. CCTV INSPECTIONS WILL BE RECORDED. IN THE EVENT THAT THE CONTRACTOR REQUESTS A COPY OF THE CCTV INSPECTION, THE CONTRACTOR WILL BE CHARGED FOR THE COPY AT A RATE OF $25.00.

6. FINAL PROJECT SUBMITTALS

A. "AS–BUILT" PLANS AND CERTIFIED EASEMENTS RECORDED WITH THE BUREAU OF CONVEYANCES, IF APPLICABLE ARE REQUIRED FOR FINAL ACCEPTANCE OF SEWER CONSTRUCTION BY WWD. UPON FINAL PROJECT INSPECTION AND DECLARATION OF SATISFACTORY COMPLETION BY THE WASTEWATER DIVISION CHIEF, SUBMIT TO WWD ONE (1) SET OF FIELD RECORD DRAWINGS AND ONE (1) SET OF "AS–BUILT" PLANS ONE (1) ELECTRONIC SET IN AUTOCAD 2009 OR NEWER VERSION AND ONE (1) ELECTRONIC SET IN ADOBE PDF FORMAT.

B. IT IS MANDATORY THAT THE "AS–BUILT" PLANS SHOW CORRECTLY IDENTIFIED PROPERTY TMK NUMBERS, LOCATION OF SEWER MANHOLES, LATERALS, CLEANOUTS AND ALL OTHER MAJOR COMPONENTS OF THE WASTEWATER COLLECTION SYSTEM INCLUDING RIM AND INVERT ELEVATIONS AT ALL SEWER MANHOLES, LATERAL CONNECTIONS AT THE MAIN, AND LATERAL ELEVATIONS AT THE CLEANOUT. SUBMITTED DOCUMENTATION SHALL BE CERTIFIED BY A HAWAII LICENSED PROFESSIONAL LAND SURVEYOR ATTESTING TO THE ACCURACY OF LOCATIONS AND ELEVATIONS OF ALL MAJOR COMPONENTS OF THE WASTEWATER COLLECTION SYSTEM AS SHOWN ON THE AS–BUILT PLANS.

WATER NOTES (PRIVATE)

1. UNLESS OTHERWISE SPECIFIED, ALL MATERIALS AND CONSTRUCTION OF WATER SYSTEM FACILITIES AND APPURTENANCES SHALL BE IN ACCORDANCE WITH "WATER SYSTEM STANDARDS, STATE OF HAWAII, DATED 2002, THE "WATER SYSTEM EXTERNAL CORROSION CONTROL STANDARDS", VOLUME 3, DATED 1991, AND ALL AMENDMENTS AND ADDITIONS.

2. THE CONTRACTOR SHALL BE SOLELY RESPONSIBLE FOR ALL ASSUMPTIONS, DEDUCTIONS, OR CONCLUSIONS HE/SHE MAY MAKE OR DERIVE FROM THE SUBSURFACE INFORMATION OR DATA FURNISHED ON THE PLANS. THE CONTRACTOR MUST SATISFY HIMSELF/HERSELF THROUGH HIS/HER OWN INVESTIGATIONS AS TO WHAT SUBSURFACE CONDITIONS ARE TO BE ENCOUNTERED.

WATER NOTES (PRIVATE) (CONT.)

3. THE CONTRACTOR SHALL BE RESPONSIBLE FOR THE PROPER DISPOSAL OF ALL EFFLUENT ASSOCIATED WITH THE CONSTRUCTION ACTIVITY AND THE DISINFECTION AND HYDROTESTING OPERATIONS TO SAFEGUARD PUBLIC HEALTH AND SAFETY IN ACCORDANCE WITH APPLICABLE DEPARTMENT OF HEALTH REQUIREMENTS. ALL PERMITS AND LICENSES FOR CONSTRUCTION WATER DISPOSAL, INCLUDING ALL APPLICATIONS, CHARGES, FEES, AND TAXES, ARE THE RESPONSIBILITY OF THE CONTRACTOR.

4. ALL WATER MAINS AND APPURTENANCES SHALL BE SUBJECTED TO A HYDROSTATIC TEST PRESSURE OF 150 PSI BY THE CONTRACTOR IN ACCORDANCE WITH DIVISION 300 – CONSTRUCTION, SECTION 302.28, PIPE PRESSURE TEST OF THE "WATER SYSTEM STANDARDS", DATED 2002. DURING THE 30–MINUTE PRESSURE TEST, AND AFTER THE PRESSURE HAS STABILIZED, THE PRESSURE SHALL NOT DROP MORE THAN 10 PSI.

5. THE EXISTENCE AND LOCATION OF UNDERGROUND UTILITIES AND STRUCTURES AS SHOWN ON THE PLANS ARE FROM THE LATEST AVAILABLE DATA BUT IS NOT GUARANTEED AS TO THE ACCURACY OR THE ENCOUNTERING OF OTHER OBSTACLES DURING THE COURSE OF WORK. THE CONTRACTOR SHALL BE RESPONSIBLE AND PAY FOR ALL DAMAGES TO THE EXISTING UTILITIES. THE CONTRACTOR SHALL NOT ASSUME THAT WHERE NO UTILITIES ARE SHOWN, THAT NONE EXIST.

DISCHARGE OF DECHLORINATED WATER NOTES

1. THE CONTRACTOR SHALL NOTIFY THE DIVISION OF WATER QUALITY'S SOURCE CONTROL SECTION BY TELEPHONE (692–5377) AT LEAST 48 HOURS PRIOR TO THE DISCHARGE DATES. A WASTEWATER SERVICE INVESTIGATOR MAY WITNESS THE DISCHARGE EVENT TO VERIFY COMPLIANCE.

2. THE CONTRACTOR SHALL MONITOR THE WATER FOR CHLORINE RESIDUAL PRIOR TO DISCHARGE. THE ALLOWABLE DISCHARGE LEVEL OF CHLORINE RESIDUAL IS 5 PPM.

3. THE CONTRACTOR SHALL DISCHARGE THE EFFLUENT WATER AT A MAXIMUM ALLOWABLE FLOW RATE OF 50 GPM.

4. THE CONTRACTOR SHALL SUBMIT TO THE DIRECTOR OF THE DEPARTMENT OF ENVIRONMENTAL SERVICES, WITHIN 20 DAYS OF THE DISCHARGING EVENT, A SELF–MONITORING REPORT CERTIFYING THE FLOW RATE OF DISCHARGE, THE EXACT TIME AND DATE OF DISCHARGE, THE DURATION OF DISCHARGE AND TOTAL VOLUME DISCHARGED. THIS REPORT SHALL BE SUBMITTED BY THE CONSTRUCTION SUPERVISOR ON–SITE DURING THE DISCHARGE AND SHALL BE CERTIFIED WITH THE FOLLOWING STATEMENT:

"I HEREBY CERTIFY THAT THE EVENT WAS WITNESSED BY MYSELF AND ALL INFORMATION IS BASED ON ACTUAL FACTS DURING DISCHARGE."

5. IN THE EVENT ANY ADVERSE CONDITIONS DO OCCUR DURING THE DISCHARGE PERIOD, AN IMMEDIATE WORK STOPPAGE AND NOTIFICATION TO THE DEPARTMENT OF ENVIRONMENTAL SERVICES OF THE PROBLEM IS REQUIRED.

PUBLIC HEALTH SAFETY AND CONVENIENCE NOTES

1. CONTRACTOR SHALL OBSERVE AND COMPLY WITH ALL FEDERAL, STATE, AND LOCAL LAWS REQUIRED FOR THE PROTECTION OF PUBLIC HEALTH, SAFETY AND ENVIRONMENTAL QUALITY.

2. THE CONTRACTOR, AT HIS OWN EXPENSE, SHALL KEEP THE PROJECT AND ITS SURROUNDING AREAS FREE FROM DUST NUISANCE. THE WORK SHALL BE IN CONFORMANCE WITH THE AIR POLLUTION STANDARDS AND REGULATIONS OF THE STATE DEPARTMENT OF HEALTH. THE COUNTY SHALL REQUIRE SUPPLEMENTARY MEASURES IF REQUIRED.

3. THE CONTRACTOR SHALL BE RESPONSIBLE FOR THE CLEANING AND REMOVAL OF ALL SILT AND DEBRIS GENERATED BY HIS WORK AND DEPOSITED AND ACCUMULATED WITHIN DOWNSTREAM WATERWAYS, DITCHES AND DRAIN PIPES AND PUBLIC AND PRIVATE ROADWAYS. THE CONTRACTOR AGREES TO REIMBURSE THE OWNER FOR ALL COSTS EXPENDED IN PERFORMANCE OF ABOVE WORK IF REQUIRED FOR PUBLIC HEALTH AND SAFETY OR MADE NECESSARY BY NON–PERFORMANCE BY THE CONTRACTOR.

4. THE CONTRACTOR SHALL NOT PERFORM ANY CONSTRUCTION OPERATION SO AS TO CAUSE FALLING ROCKS, SOIL OR DEBRIS IN ANY FORM TO FALL, SLIDE OR FLOW INTO EXISTING COUNTY DRAINAGE SYSTEMS, OR ADJOINING PROPERTIES, STREETS OR NATURAL WATERCOURSES. SHOULD SUCH VIOLATIONS OCCUR, THE CONTRACTOR MAY BE CITED AND THE CONTRACTOR SHALL IMMEDIATELY MAKE ALL REMEDIAL ACTIONS NECESSARY.

5. THE CONTRACTOR SHALL PROVIDE, INSTALL AND MAINTAIN ALL NECESSARY SIGNS, LIGHTS, FLARES, BARRICADES, MARKERS, CONES, AND OTHER PROTECTIVE FACILITIES AND SHALL TAKE ALL NECESSARY PRECAUTIONS FOR THE PROTECTION, CONVENIENCE AND SAFETY OF THE PUBLIC.

6. THE CONTRACTOR'S ATTENTION IS DIRECTED TO CHAPTER 46, PUBLIC HEALTH REGULATIONS, DEPARTMENT OF HEALTH, STATE OF HAWAII, "COMMUNITY NOISE CONTROL," IN WHICH MAXIMUM PERMISSIBLE NOISE LEVELS HAVE BEEN SET. IF THE CONSTRUCTION WORK REQUIRES A PERMIT FROM THE DIRECTOR OF HEALTH, THE CONTRACTOR SHALL OBTAIN A COPY OF CHAPTER 46 AND BECOME FAMILIAR WITH THE NOISE LEVEL RESTRICTIONS AND THE PROCEDURES FOR OBTAINING A PERMIT FOR THE CONSTRUCTION ACTIVITIES. APPLICATION AND INFORMATION ON VARIANCES ARE AVAILABLE FROM THE HAWAII DISTRICT HEALTH OFFICE, 75 AUPUNI STREET, HILO, HI 96720 OR BY TELEPHONE AT (808)974–6006.

Eric S. Takamura 8/24/2020

WASTEWATER DIVISION CHIEF DATE

ABBREVIATIONS

AC	ASPHALT CONCRETE	IN	INCHES
AMT.	AMOUNT	INV	INVERT
ARCH	ARCHITECTURAL	JP	JOINT POLE (CABLE/ELEC/TELE)
BC	BOTTOM OF CURB	LF	LINEAR FEET
BFP	BACKFLOW PREVENTER	LP	LOW POINT
BLDG.	BUILDING	MAX	MAXIMUM
BOT.	BOTTOM	MECH	MECHANICAL
BV	BOTTOM VERTICAL	MFG	MANUFACTURER
BW	BOTTOM OF WALL	MH	MANHOLE
C/CONC	CONCRETE	MIN	MINIMUM
CFS	CUBIC FEET PER SECOND	NO.	NUMBER
CI	CAST IRON	O.C.	ON CENTER
CIP	CAST IRON PIPE	O/H	OVERHEAD
℄	CENTERLINE	P	AC PAVEMENT
CLF	CHAIN LINK FENCE	PL	PROPERTY LINE
CLR	CLEARANCE	POR	PORTION
CMU	CONCRETE MASONRY UNIT	PROP	PROPOSED
CONN.	CONNECTION	PVC	POLYVINYL CHLORIDE
CONT.	CONTINUOUS	PVMT	PAVEMENT
COTG	CLEANOUT TO GRADE	R	RADIUS
CRM	CONCRETE RUBBLE MASONRY	ROW	RIGHT–OF–WAY
CTR	CENTER	RPBP	REDUCED PRESSURE BACKFLOW PREVENTER
CY	CUBIC YARDS	S	SEWER
DET.	DETAIL	SCH.	SCHEDULE
DIA.	DIAMETER	SF	SQUARE FEET
DCM	DETECTOR CHECK (DC) METER	SHT	SHEET
DI	DRAIN INLET OR DUCTILE IRON	SL	SEWER LINE
DIST	DISTANCE	SMH	SEWER MANHOLE
DS	DOWNSPOUT	STA	STATION
DSO	DOWNSPOUT OUTLET	STD.	STANDARD
DW	DRYWELL	STRUCT	STRUCTURAL
DWG	DRAWING	SW	SWALE
DWS	DEPARTMENT OF WATER SUPPLY	TC	TOP OF CURB
EA	EACH	THK.	THICK
EG	EXISTING GRADE	TLP	TELEPHONE POLE
ELEC	ELECTRICAL	TPWL	TOP OF PIPE WATERLINE
ELEV./EL.	ELEVATION	TMK	TAX MAP KEY
ELP	ELECTRIC POLE	TRANS	TRANSFORMER
EP	EDGE OF PAVEMENT	TS	TOP OF STEM
EQ.	EQUAL	TV	TOP VERTICAL
ES	EXISTING SEWER	TW	TOP OF WALL
ESMT	EASEMENT	TYP.	TYPICAL
EST.	ESTIMATED	UP	UTILITY POLE
EW	EXISTING WATER	V	VERTICAL
EXIST.	EXISTING	W	WATER
FF	FINISHED FLOOR	W/	WITH
FG	FINISH GRADE	WL	WATER LINE
FH	FIRE HYDRANT	WM	WATER METER
FT	FEET	WV	WATER VALVE
HB	HOSE BIBB	WWD	COUNTY OF HAWAII ENVIRONMENTAL MANAGEMENT WASTEWATER DIVISION
HP	HIGH POINT		
HT.	HEIGHT		

DETAIL/SECTION TITLE

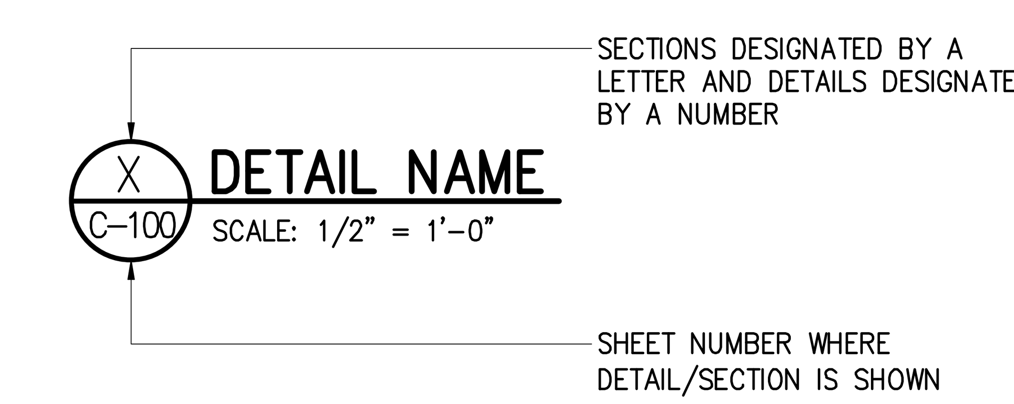

REVISION NO.	SYM.	DESCRIPTION	SHT./OF	DATE	APPROVED

YVONNE M. TURRO LICENSED PROFESSIONAL ENGINEER No. 11144–C HAWAII, U.S.A.

THIS LICENSE EXPIRES APRIL 30, 2024

SIGNATURE

THIS WORK WAS PREPARED BY ME OR UNDER MY SUPERVISION AND CONSTRUCTION OF THIS PROJECT WILL BE UNDER MY OBSERVATION. (OBSERVATION OF CONSTRUCTION AS DEFINED IN CHAPTER 16–115 OF THE HAWAII ADMINISTRATIVE RULES, DEPARTMENT OF COMMERCE AND CONSUMER AFFAIRS ENTITLED PROFESSIONAL ENGINEERS, ARCHITECTS, SURVEYORS AND LANDSCAPE ARCHITECTS).

STATE OF HAWAII
DEPARTMENT OF LAND AND NATURAL RESOURCES
ENGINEERING DIVISION

HAWAII DISTRICT LAND OFFICE
HILO, HAWAI`I

CIVIL GENERAL NOTES & ABBREVIATIONS

DESIGNED: AA | SUBMITTED:
DRAWN: YT | DATE: NOVEMBER 2022
CHECKED: YT | SCALE: N/A
APPROVED: Carty Chang E-signed 2022-11-28 04:17PM HST carty.s.chang@hawaii.gov State of Hawaii Chief Engineer
CHIEF ENGINEER

DRAWING NO. C-003

JOB NO. E00BH30A SHEET NO. 7 OF 77 SHEETS

\\tlcg2019\Netshare\1. projects\42 - erskine\14224 - dlnr land div hq\DRAWINGS\NOTES.dwg - 10/28/2022 3:30 PM

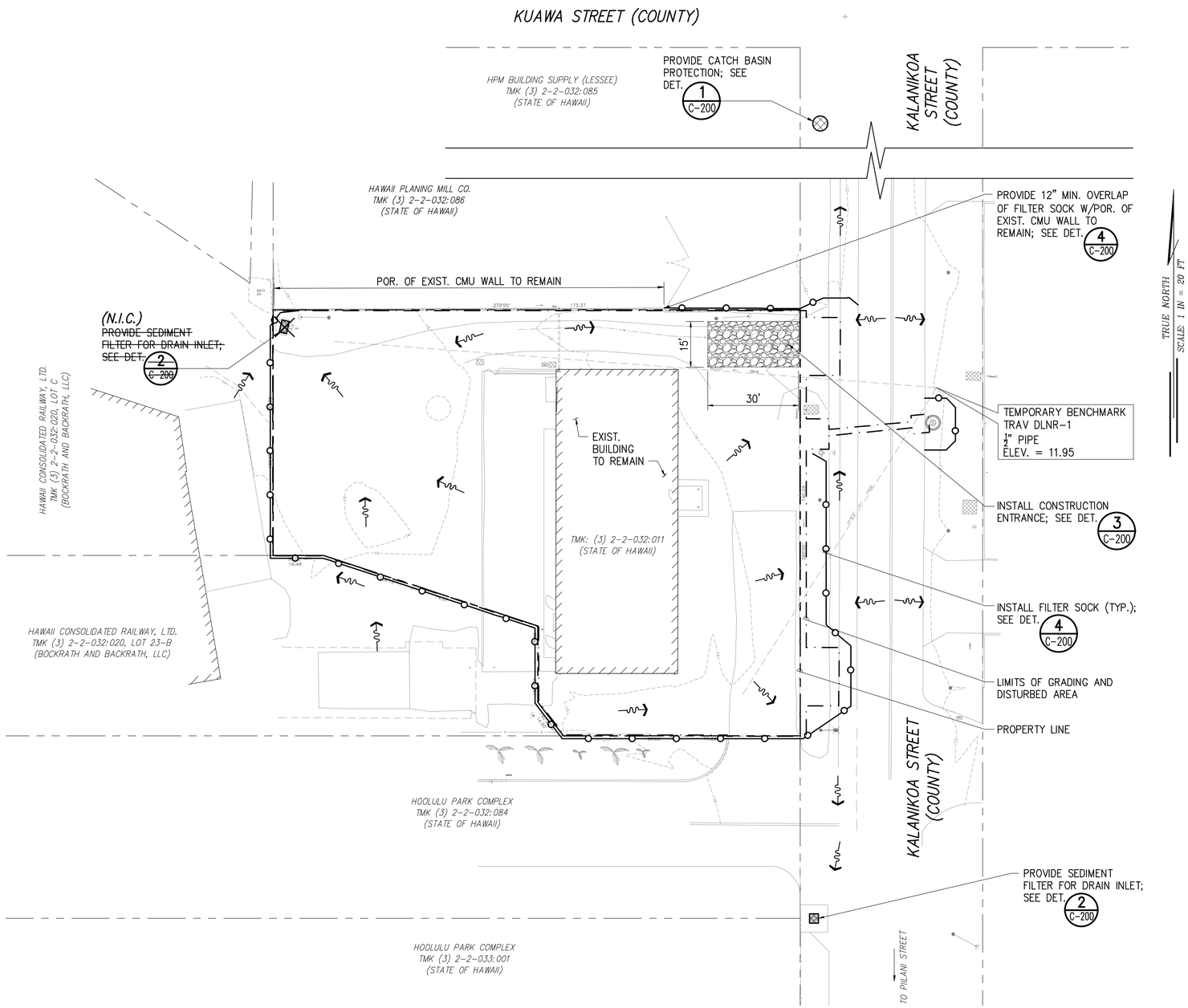

BEST MANAGEMENT PRACTICES (BMPs):

1. THE CONTRACTOR, AT THEIR OWN EXPENSE, SHALL KEEP THE PROJECT AREAS AND SURROUNDING AREAS FREE FROM DUST NUISANCE. THE WORK SHALL BE DONE IN CONFORMANCE WITH AIR POLLUTION CONTROL STANDARDS CONTAINED IN HAWAII ADMINISTRATIVE RULES: CHAPTER 11-60, "AIR POLLUTION CONTROL".
2. MEASURES TO CONTROL EROSION AND OTHER POLLUTANTS SHALL BE IN PLACE BEFORE ANY CONSTRUCTION IS INITIATED. THESE MEASURES SHALL BE PROPERLY CONSTRUCTED AND MAINTAINED THROUGHOUT THE CONSTRUCTION PERIOD.
3. CONTRACTOR SHALL OBSERVE AND COMPLY WITH THE STATE DEPARTMENT OF HEALTH REGULATIONS REGARDING STORMWATER DISCHARGE.
4. ALL EROSION CONTROL MEASURES SHALL BE CHECKED AND REPAIRED AS NECESSARY, FOR EXAMPLE, WEEKLY IN DRY PERIODS AND WITHIN TWENTY-FOUR HOURS AFTER ANY RAINFALL OF 0.5 INCHES OR GREATER WITHIN A 24-HOUR PERIOD. DURING AN EVENT OF ABOVE NORMAL RAINFALL, THE CONTRACTOR SHALL REMOVE THE SEDIMENT AND DRAIN INLET FILTER AND REPLACE AFTER THE EVENT HAS PASSED. THE CONTRACTOR SHALL MAINTAIN RECORDS OF ALL CHECKS AND REPAIRS AND A COPY SHALL BE AVAILABLE IN THE FIELD OFFICE.
5. INLET PROTECTION SHALL BE IMPLEMENTED AT THE INDICATED DRAIN INLET(S) TO PREVENT ANY SEDIMENT LADEN RUNOFF FROM LEAVING THE SITE. INLET PROTECTION DEVICES SHALL BE REMOVED DURING PERIODS OF ABOVE NORMAL RAINFALL AND REPLACED AFTER THE EVENT HAS PASSED.
6. GOOD HOUSEKEEPING SHALL BE UTILIZED TO ENSURE PROTECTION OF ROADWAYS FROM MUD, DIRT, AND DEBRIS.
7. THE CONTRACTOR SHALL PROVIDE EROSION CONTROL MEASURES FOR THEIR CONSTRUCTION, STAGING, AND STORAGE AREAS AND SHALL INSPECT AND MONITOR THEIR CONSTRUCTION, STAGING, AND STORAGE AREAS TO ENSURE THAT NON-STORM WATER DISCHARGES ARE EMITTED. IF SUCH SOURCES ARE IDENTIFIED THE CONTRACTOR SHALL PROVIDE IMMEDIATE MITIGATIVE MEASURES.
8. CONTRACTOR SHALL INSTALL TEMPORARY FILTER SOCKS AND DRAIN INLET PROTECTION AS SHOWN ON PLAN.
9. NO SEDIMENT LADEN RUNOFF SHALL LEAVE THE SITE.
10. WATER TRUCKS SHALL BE UTILIZED TO MINIMIZE THE AMOUNT OF AIRBORNE DUST.
11. THE FINAL LIFT OF EACH DAYS WORK SHALL BE COMPACTED TO PREVENT EROSION OF FILL MATERIALS.
12. THE CONTRACTOR SHALL DISPOSE OF VEGETATION, EQUIPMENT, WASTE CONCRETE AND HYDRAULIC OILS OFF-SITE.
13. AT THE END OF CONSTRUCTION, EXISTING DRAIN INLETS SURROUNDING THE PROJECT SITE SHALL BE INSPECTED AND ANY ACCUMULATED SEDIMENT AND DEBRIS FOUND IN THE DRAIN INLETS SHALL BE REMOVED. FLUSHING INTO THE DRAINAGE SYSTEM IS PROHIBITED.
14. GRASS SHALL BE ESTABLISHED ON DISTURBED AREAS WHICH ARE AT FINAL GRADE OR WILL NOT BE WORKED FOR LONGER THAN 14 DAYS. ALTERNATIVES TO GRASS INCLUDE EROSION BLANKETS WITH ANCHORS OR 6-MIL PLASTIC SHEETS. PERMANENT GRASSING SHALL BE APPLIED UPON COMPLETION OF GRADING WORK. THE CONTRACTOR SHALL ALSO ESTABLISH COVER OR LANDSCAPE PRIOR TO REMOVING EROSION CONTROL MEASURES.

LEGEND:

- PROPERTY LINE
- LIMITS OF GRADING AND DISTURBED AREA
- EXIST. CONTOUR
- FILTER SOCK
- DRAIN INLET PROTECTION
- CATCH BASIN PROTECTION
- CONSTRUCTION ENTRANCE
- FLOW DIRECTION

EROSION & SEDIMENT CONTROL PLAN

SCALE: 1"= 20'

GRAPHIC SCALE

20 0 10 20 40 80

(IN FEET)
1 inch = 20 ft.

REVISION NO.	SYM.	DESCRIPTION	SHT./OF	DATE	APPROVED

YVONNE M. TURPO
LICENSED PROFESSIONAL ENGINEER
No. 11144-C
HAWAII, U.S.A.

THIS LICENSE EXPIRES APRIL 30, 2024

SIGNATURE

THIS WORK WAS PREPARED BY ME OR UNDER MY SUPERVISION AND DIRECTION OF THIS PROJECT WILL BE UNDER MY OBSERVATION. (OBSERVATION OF CONSTRUCTION AS DEFINED IN CHAPTER 16-115 OF THE HAWAII ADMINISTRATIVE RULES, DEPARTMENT OF COMMERCE AND CONSUMER AFFAIRS ENTITLED: PROFESSIONAL ENGINEERS, ARCHITECTS, SURVEYORS AND LANDSCAPE ARCHITECTS).

STATE OF HAWAII
DEPARTMENT OF LAND AND NATURAL RESOURCES
ENGINEERING DIVISION

HAWAII DISTRICT LAND OFFICE
HILO, HAWAI'I

EROSION & SEDIMENT CONTROL PLAN

DESIGNED: AA	SUBMITTED:
DRAWN: YT	DATE: NOVEMBER 2022
CHECKED: YT	SCALE: 1"=20'
APPROVED: CHIEF ENGINEER	DRAWING NO. C-004

Carty Chang
E-signed 2022-11-28 04:17PM HST
carty.s.chang@hawaii.gov
State of Hawaii
Chief Engineer

JOB NO. E00BH30A

SHEET NO. 8 OF 77 SHEETS

\\tlcg2019\Netshare\1 projects\42 - erskine\14224 - dlnr land div hq\DRAWINGS\DEMO & ESCP.dwg - 11/1/2022 3:14 PM

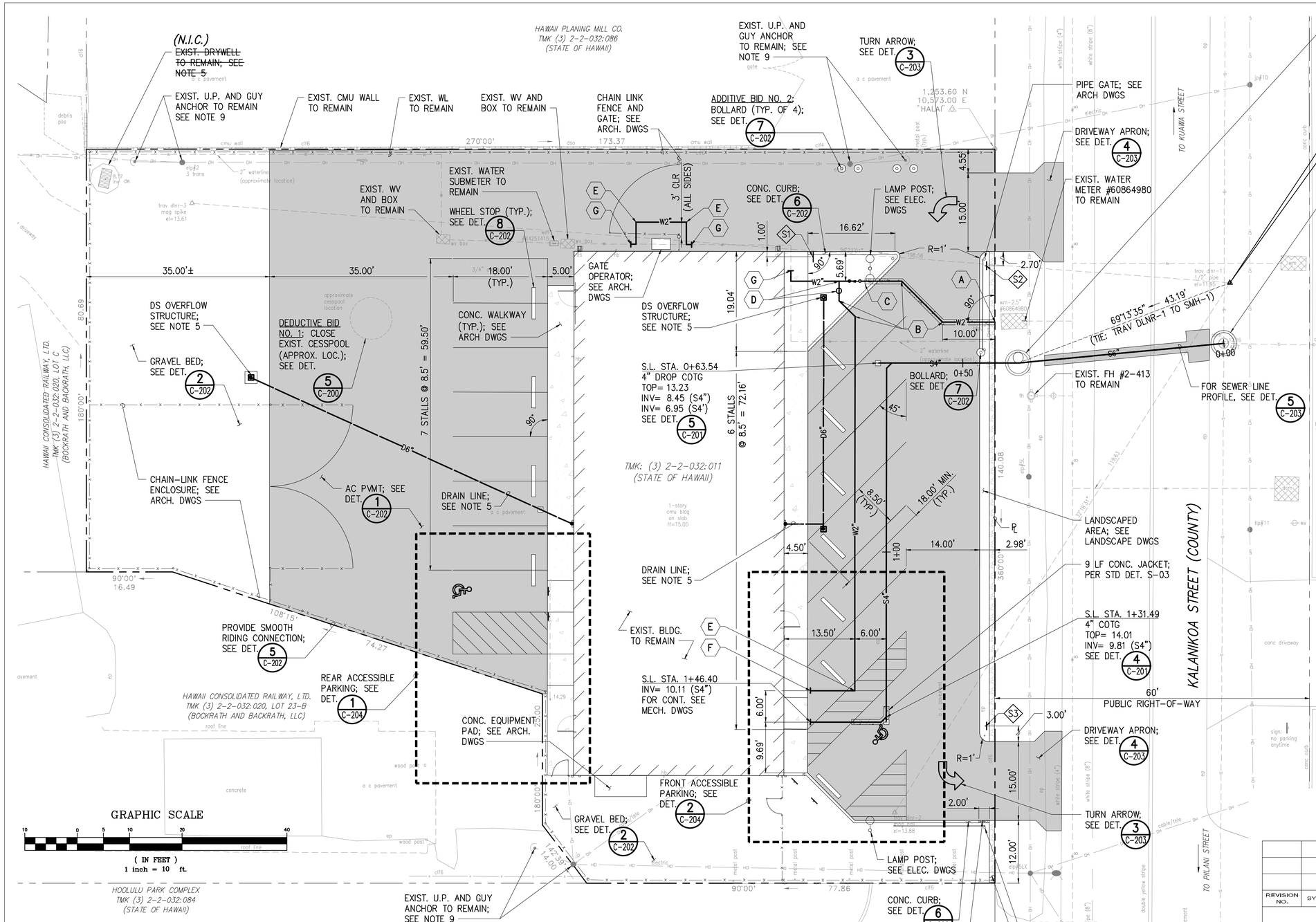

SITE & UTILITIES PLAN

SCALE: 1"= 10'

NOTES:

1. CONTRACTOR SHALL VERIFY DEPTH AND LOCATION OF ALL UTILITIES IN FIELD PRIOR TO START OF CONSTRUCTION.
2. ALL PAVEMENT MARKINGS IN COUNTY ROW SHALL BE RESTORED TO MATCH EXISTING CONDITIONS.
3. RESTORE ALL EXCAVATED AREAS WITHIN KALANIKOA STREET PER DET. 1 C-201
4. SEE ALSO "NOTES FOR WORK WITHIN COUNTY RIGHT OF WAY" ON DWG. C-001.
5. FOR DRAINAGE SYSTEM INFORMATION, SEE DWG. C-110.
6. FOR CONC. WALKWAYS, FENCING, CRM WALL, GATES AND GATE OPERATOR, SEE ARCH. DWGS.
7. FOR LANDSCAPING; SEE LANDSCAPE DWGS.
8. DIMENSIONS ARE MEASURED FROM EDGE OF PAVEMENT OR CENTER OF PIPES AND PAVEMENT MARKINGS UNLESS OTHERWISE INDICATED.
9. CONTRACTOR SHALL BRACE UTILITY POLES AS NECESSARY DURING CONSTRUCTION.

LEGEND:

- PROPERTY LINE
- EXISTING UTILITY LINE
- NEW CHAIN LINK FENCE
- NEW ASPHALT PAVEMENT
- NEW CONCRETE PAVEMENT
- NEW CONCRETE CURB
- NEW CONCRETE HEADER
- S4" — NEW SEWER LINE
- D4" — NEW DRAIN LINE
- W4" — NEW WATER LINE

SITE SIGNAGE

SEE DET. 1 C-203

- S1 "AUTHORIZED VEHICLES ONLY BEYOND THIS POINT" SIGN
- S2 "ENTER ONLY" SIGN
- S3 "EXIT ONLY" SIGN

WATER NOTES

- A CONNECT TO EXIST. W2" CONTRACTOR TO VERIFY SIZE; PROVIDE 3" MIN. CLR. BETWEEN CRM WALL FTG AND TOP OF CONC. JACKET BEGIN CONC. JACKET SEE DET. 6 C-200
- B 1 – 2" ⅛ BEND (H)
- C END CONC. JACKET 1 – 2" BFP ASSEMBLY SEE DET. 7 C-200
- D 1 – 2" TEE 1 – 2" GV 1 – VALVE BOX
- E 1 – 2" ¼ BEND (H)
- F CONNECT TO W2"; SEE MECH. DWGS FOR CONT.
- G CONNECT TO W2" 1 – 2" ¼ BEND (H) CONTRACTOR TO VERIFY SIZE

WASTEWATER DIVISION CHIEF

DATE

REVISION NO.	SYM.	DESCRIPTION	SHT./OF	DATE	APPROVED

YVONNE M. TURRO — LICENSED PROFESSIONAL ENGINEER No. 11144-C — HAWAII, U.S.A.

THIS LICENSE EXPIRES APRIL 30, 2024

SIGNATURE

THIS WORK WAS PREPARED BY ME OR UNDER MY SUPERVISION AND DOCUMENTATION OF THIS PROJECT WILL BE UNDER MY OBSERVATION. (OBSERVATION OF CONSTRUCTION AS DEFINED IN CHAPTER 16-115 OF THE HAWAII ADMINISTRATIVE RULES, DEPARTMENT OF COMMERCE AND CONSUMER AFFAIRS ENTITLED PROFESSIONAL ENGINEERS, ARCHITECTS, SURVEYORS AND LANDSCAPE ARCHITECTS).

STATE OF HAWAII
DEPARTMENT OF LAND AND NATURAL RESOURCES
ENGINEERING DIVISION

HAWAII DISTRICT LAND OFFICE
HILO, HAWAI'I

SITE & UTILITIES PLAN

DESIGNED: AA	SUBMITTED:
DRAWN: YT	DATE: NOVEMBER 2022
CHECKED: YT	SCALE: 1"=10'
APPROVED:	DRAWING NO. C-100

Carty Chang
E-signed 2022-11-28 04:17PM HST
carty.s.chang@hawaii.gov
State of Hawaii
Chief Engineer

CHIEF ENGINEER

JOB NO. E00BH30A

SHEET NO. 9 OF 77 SHEETS

\\tlcg2019\Netshare\1 projects\42 - erskine\14224 - dlnr land div hq\DRAWINGS\SITE & UTILITIES.dwg - 11/1/2022 3:16 PM

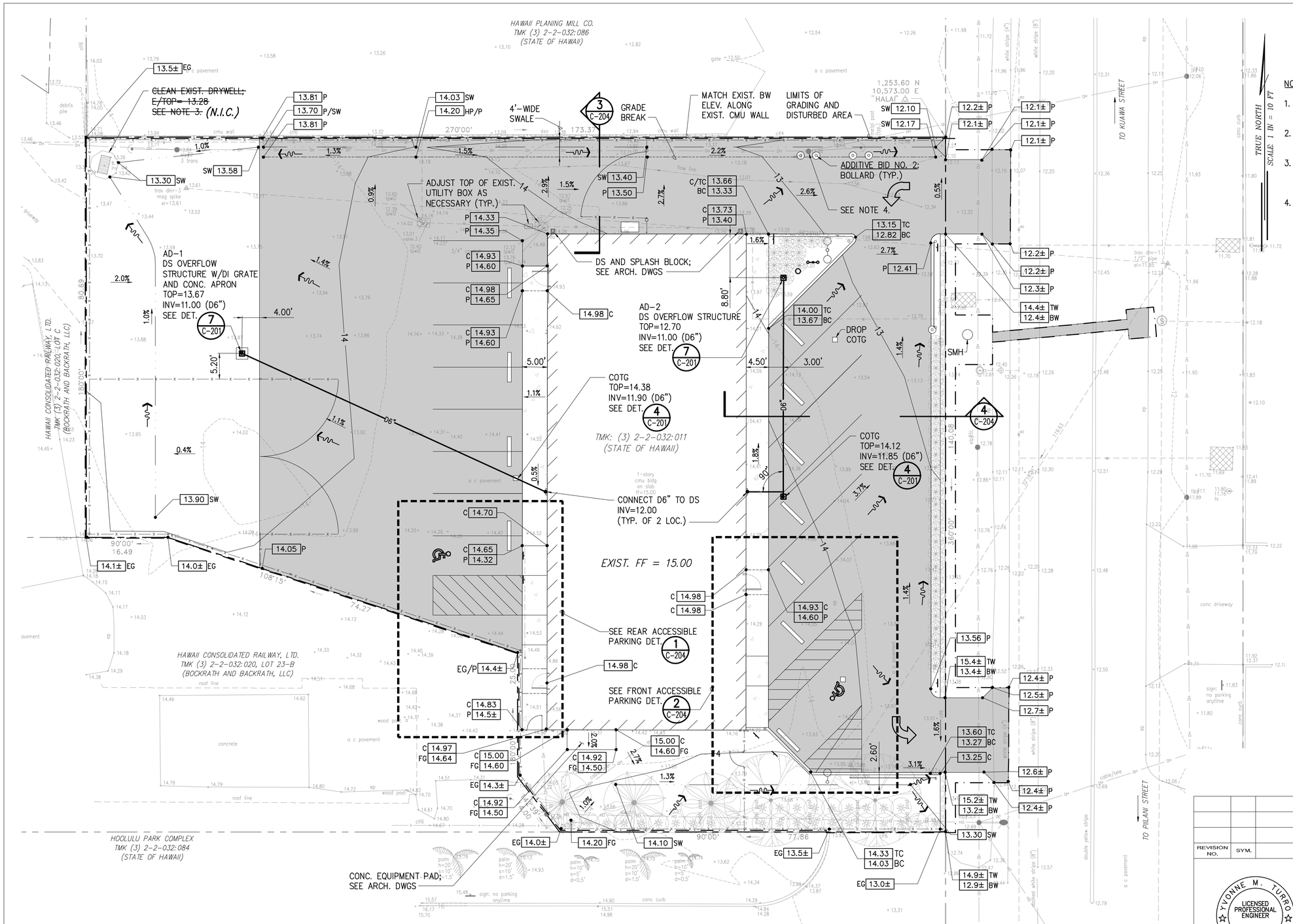

NOTES:

1. FOR LANDSCAPE AND IRRIGATION PLANS, SEE LANDSCAPE DRAWINGS.
2. CONTRACTOR SHALL ENSURE POSITIVE DRAINAGE IN ALL DIRECTIONS.
3. ~~REMOVE EXIST. GRATE, CLEAN AND REMOVE ALL ACCUMULATED SEDIMENTS, DEBRIS, AND ORGANIC MATTER IN THE DRYWELL.~~ (N.I.C.)
4. CONTRACTOR TO BRACE UTILITY POLES IF NECESSARY DURING CONSTRUCTION.

LEGEND:

— — —	PROPERTY LINE
— · — · —	PROJECT LIMITS/LIMITS OF DISTURBANCE
— D4" —	NEW DRAIN LINE
— x —	NEW CHAIN LINK FENCE
— 14 —	NEW GRADE CONTOUR
- - 14 - -	EXIST. CONTOUR
— · · —	SWALE CENTERLINE
— — —	GRADE BREAK
12.30	PROP. SPOT ELEVATION
x 12.30	EXIST. SPOT ELEVATION
	FLOW DIRECTION
1.5%	SLOPE
12.30 P	AC PAVEMENT
12.30 C	CONCRETE
12.30 FG	FINISH GRADE
12.30 TC / 11.80 BC	TOP CURB / BOTTOM CURB
13.80 TW / 12.30 BW	TOP OF WALL / BOTTOM OF WALL
12.30 HP	HIGH POINT
12.30 LP	LOW POINT
12.30 SW	SWALE

GRADING & DRAINAGE PLAN

SCALE: 1"= 10'

GRAPHIC SCALE

10 0 5 10 20 40

(IN FEET)
1 inch = 10 ft.

REVISION NO.	SYM.	DESCRIPTION	SHT./OF	DATE	APPROVED

YVONNE M. TURRO
LICENSED PROFESSIONAL ENGINEER
No. 11144-C
HAWAII, U.S.A.

THIS LICENSE EXPIRES APRIL 30, 2024

SIGNATURE

THIS WORK WAS PREPARED BY ME OR UNDER MY SUPERVISION AND CONSTRUCTION OF THIS PROJECT WILL BE UNDER MY OBSERVATION, (OBSERVATION OF CONSTRUCTION AS DEFINED IN CHAPTER 16-115 OF THE HAWAII ADMINISTRATIVE RULES, DEPARTMENT OF COMMERCE AND CONSUMER AFFAIRS ENTITLED "PROFESSIONAL ENGINEERS, ARCHITECTS, SURVEYORS AND LANDSCAPE ARCHITECTS).

STATE OF HAWAII
DEPARTMENT OF LAND AND NATURAL RESOURCES
ENGINEERING DIVISION

HAWAII DISTRICT LAND OFFICE
HILO, HAWAI'I

GRADING & DRAINAGE PLAN

DESIGNED: AA	SUBMITTED:
DRAWN: YT	DATE: NOVEMBER 2022
CHECKED: YT	SCALE: 1"=10'
APPROVED: CHIEF ENGINEER	DRAWING NO. C-110

Carty Chang
E-signed 2022-11-28 04:17PM HST
carty.s.chang@hawaii.gov
State of Hawaii
Chief Engineer

JOB NO. E00BH30A

SHEET NO. 10 OF 77 SHEETS

\\tlcg2019\Netshare\1 projects\42 - erskine\14224 - dlnr land div hq\DRAWINGS\GRADING & DRAINAGE.dwg - 11/1/2022 3:17 PM

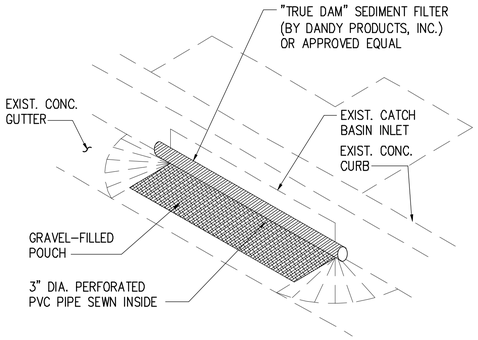

CATCH BASIN PROTECTION NOTES:

1. CONTRACTOR SHALL INSTALL SEDIMENT FILTER DEVICES AT CATCH BASIN(S) INDICATED TO PREVENT SOIL OR DEBRIS IN ANY FORM FROM ENTERING THE DRAINAGE SYSTEM.
2. ALL CONTROL MEASURES SHALL BE CHECKED AND REPAIRED AS NECESSARY.
3. CATCH BASIN PROTECTION DEVICES SHALL BE REMOVED DURING PERIODS OF ABOVE NORMAL RAINFALL THEN REPLACED AFTER THE EVENT HAS PASSED.
4. AT THE END OF THE PROJECT, EXISTING CATCH BASINS ADJACENT TO THE PROJECT SHALL BE INSPECTED AND ANY ACCUMULATED SEDIMENT AND DEBRIS FOUND IN THE CATCH BASINS SHALL BE REMOVED. FLUSHING INTO THE CATCH BASINS IS PROHIBITED.

1 / C-200 CATCH BASIN PROTECTION DETAIL

NOT TO SCALE

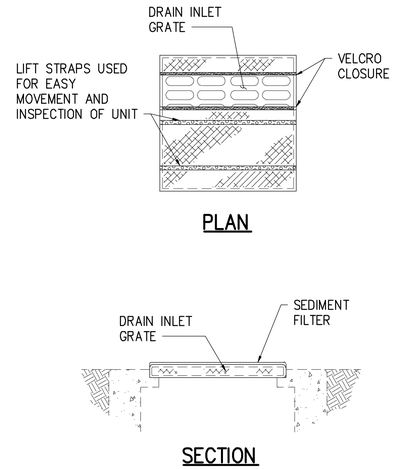

2 / C-200 SEDIMENT FILTER FOR DRAIN INLETS

NOT TO SCALE

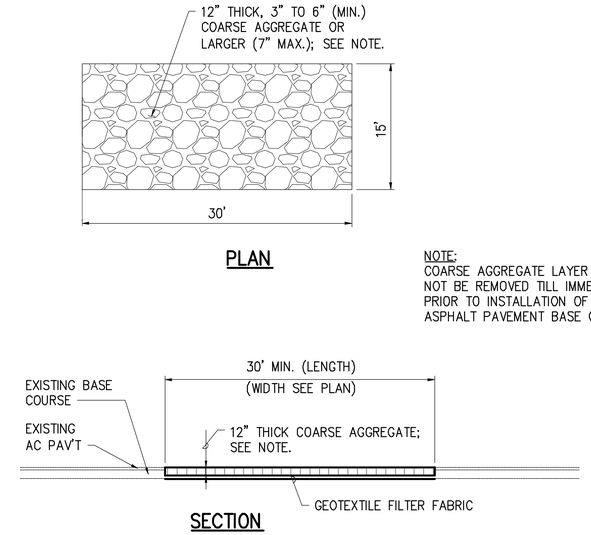

NOTE:
COARSE AGGREGATE LAYER SHALL NOT BE REMOVED TILL IMMEDIATELY PRIOR TO INSTALLATION OF ONSITE ASPHALT PAVEMENT BASE COURSE.

3 / C-200 CONSTRUCTION ENTRANCE DETAIL

NOT TO SCALE

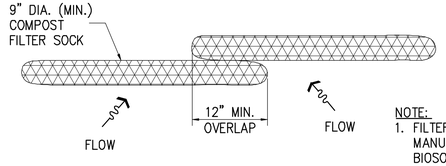

NOTE:

1. FILTER SOCK SHALL BE MANUFACTURED BY ENVIROTECH BIOSOLUTIONS, OR APPROVED EQUAL, AND INSTALLED PER MANUFACTURER'S RECOMMENDATIONS.
2. COMPOST SHALL NOT CONTAIN BIOSOLIDS AND SHOULD BE CONSISTENT WITH EPA GUIDELINES.

4 / C-200 FILTER SOCK DETAIL

NOT TO SCALE

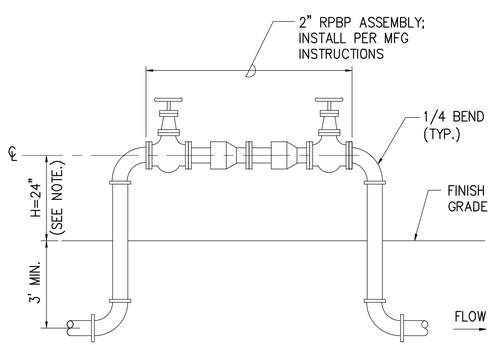

NOTE:
ALSO REFER TO DWS STD. DET. V9.

7 / C-200 BACKFLOW PREVENTER DETAIL

NOT TO SCALE

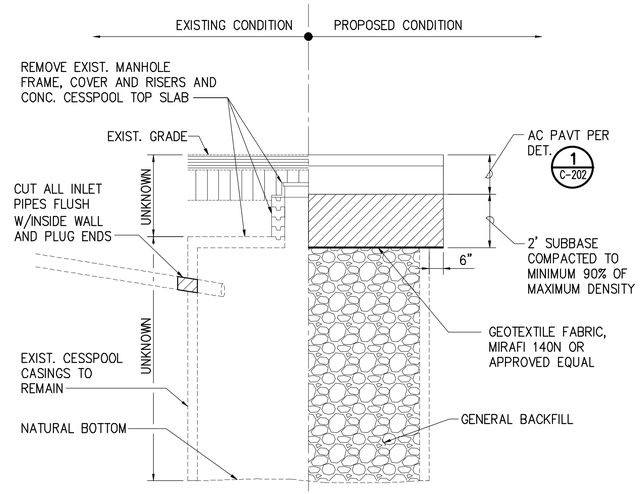

DEDUCTIVE BID NO. 1

5 / C-200 CESSPOOL CLOSURE DETAIL

NOT TO SCALE

CESSPOOL ABANDONMENT/BACKFILLING NOTES:

1. CUT AND PERMANENTLY SEAL ENDS OF ANY PIPING LEADING TO THE CESSPOOL.
2. CONTRACTOR SHALL REMOVE THE CONCRETE SLAB WELL COVER INCLUDING THE OVERLYING MANHOLE COVER, BRICKS, AND SOIL MATERIAL TO EXPOSED THE CESSPOOL AND ALL IMPEDIMENTS TO ALLOW FOR THE CLEANING AND COMPLETE BACKFILLING OF THE CESSPOOL.
3. ALL ACCUMULATED SEDIMENTS, SLUDGE, DEBRIS, AND ORGANIC MATTER SHALL BE REMOVED UNTIL NATURAL GROUND IS EXPOSED AT THE BOTTOM OF THE CESSPOOLS. USE A RIGID POLE OR ROD TO PROBE THAT THE NATURAL BOTTOM IS ACHIEVED. THE CESSPOOLS MUST BE CLEARED TO THEIR ORIGINAL EXCAVATED DEPTH BEFORE BACKFILLING COMMENCES. THE CLEARED DEPTHS SHALL BE FIELD VERIFIED AND RECORDED. CLEARING OF THE CESSPOOLS SHALL BE PERFORMED AT LEAST ONE DAY PRIOR TO ANY BACKFILLING.
4. ALL SEDIMENTS AND SLUDGE REMOVED SHALL BE DISPOSED OF AT A MUNICIPAL WASTEWATER TREATMENT PLANT WHICH ACCEPTS SUCH MATERIALS.
5. THE CONTRACTOR SHALL BE HELD RESPONSIBLE TO ENSURE NO LIQUIDS OR SOLIDS FROM THE CESSPOOL ARE DISCHARGED INTO THE GROUND (HAR, SECTION 11-62-06(G)).

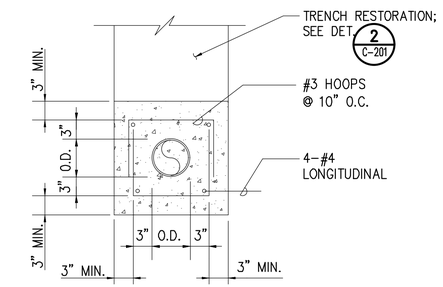

6 / C-200 CONCRETE JACKET DETAIL

NOT TO SCALE

REVISION NO.	SYM.	DESCRIPTION	SHT./OF	DATE	APPROVED

YVONNE M. TURRO — LICENSED PROFESSIONAL ENGINEER No. 11144-C — HAWAII, U.S.A.

THIS LICENSE EXPIRES APRIL 30, 2024

SIGNATURE

THIS WORK WAS PREPARED BY ME OR UNDER MY SUPERVISION AND DISCRIBES TO THE PROJECT DESIGN OR IN CONSTRUCTION OBSERVATIONS OF CONSTRUCTION AS DEFINED IN CHAPTER 16-115 OF THE HAWAII ADMINISTRATIVE RULES, DEPARTMENT OF COMMERCE AND CONSUMER AFFAIRS ENTITLED PROFESSIONAL ENGINEERS, ARCHITECTS, SURVEYORS AND LANDSCAPE ARCHITECTS).

STATE OF HAWAII
DEPARTMENT OF LAND AND NATURAL RESOURCES
ENGINEERING DIVISION

HAWAII DISTRICT LAND OFFICE
HILO, HAWAI'I

CIVIL DETAILS

DESIGNED: AA	SUBMITTED:
DRAWN: YT	DATE: NOVEMBER 2022
CHECKED: YT	SCALE: AS SHOWN
APPROVED: Carty Chang E-signed 2022-11-28 04:17PM HST carty.s.chang@hawaii.gov State of Hawaii Chief Engineer	DRAWING NO. C-200
CHIEF ENGINEER	

\\tlcg2019.Netshare\1 projects\42 - erskine\14224 - dlnr land div hq\DRAWINGS\DETAILS.dwg - 11/1/2022 3:10 PM

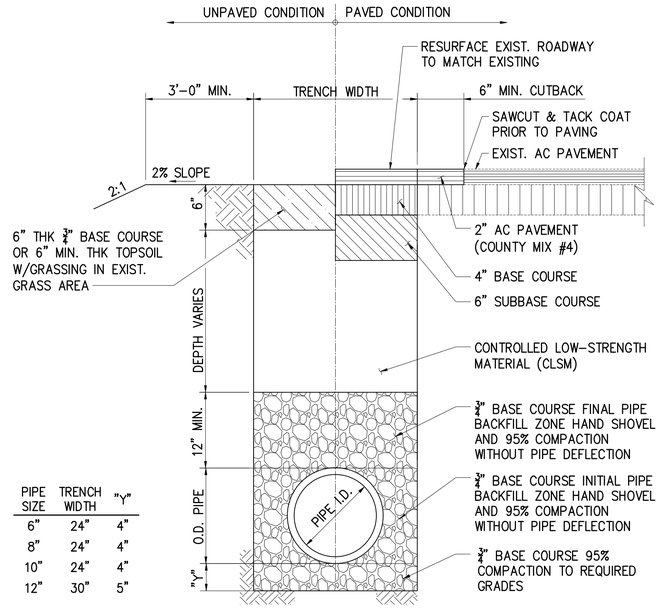

PIPE SIZE	TRENCH WIDTH	"Y"
6"	24"	4"
8"	24"	4"
10"	24"	4"
12"	30"	5"

1 C-201 TRENCH RESTORATION DETAIL (WITHIN COUNTY RIGHT OF WAY)

NOT TO SCALE

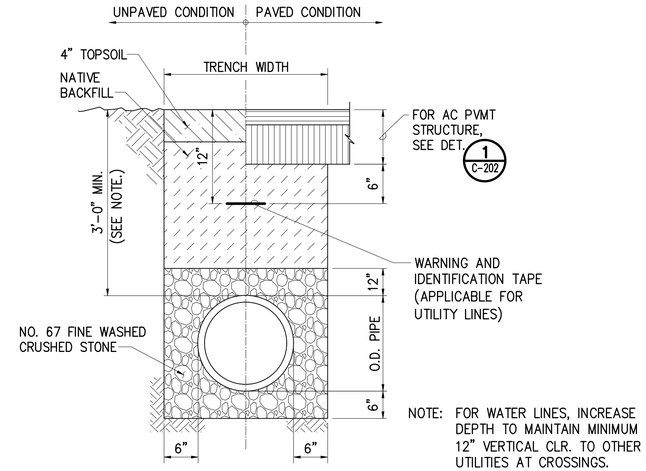

NOTE: FOR WATER LINES, INCREASE DEPTH TO MAINTAIN MINIMUM 12" VERTICAL CLR. TO OTHER UTILITIES AT CROSSINGS.

2 C-201 TRENCH RESTORATION DETAIL (PRIVATE)

NOT TO SCALE

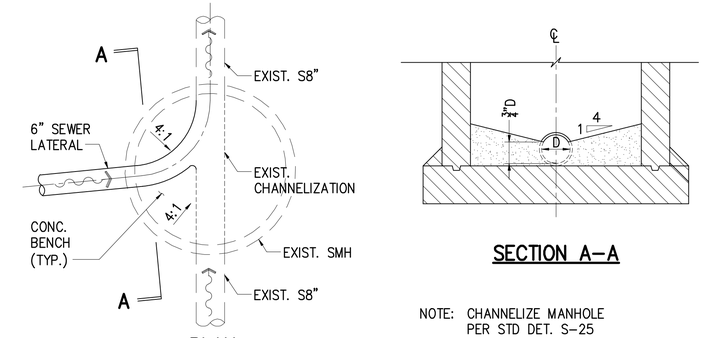

NOTE: CHANNELIZE MANHOLE PER STD DET. S-25

3 C-201 CHANNELIZE EXISTING SEWER MANHOLE

NOT TO SCALE

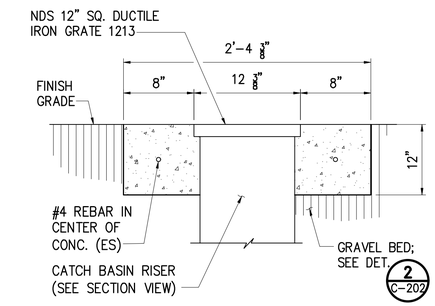

AD-1 CONC. APRON DETAIL

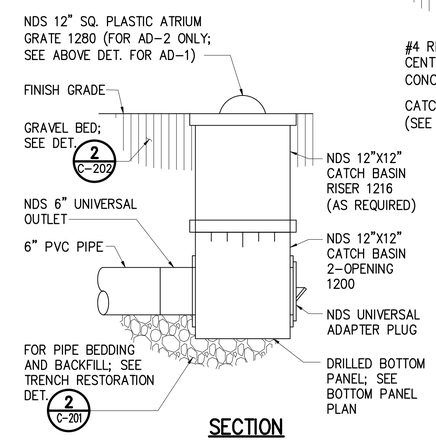

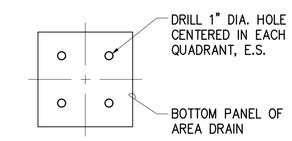

7 C-201 DOWNSPOUT OVERFLOW STRUCTURE

NOT TO SCALE

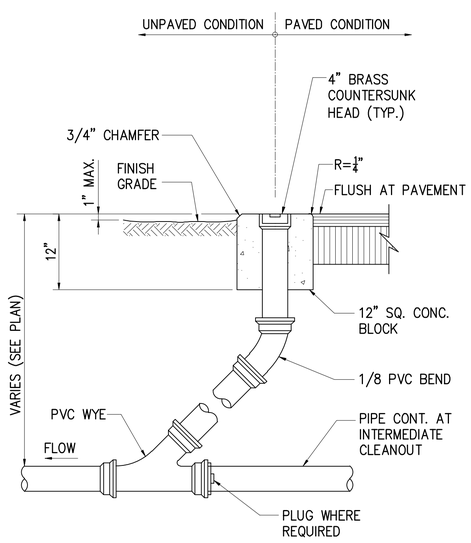

4 C-201 CLEANOUT TO GRADE

NOT TO SCALE

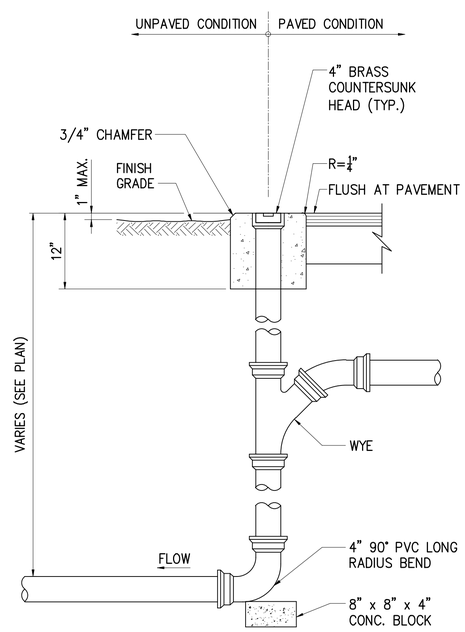

5 C-201 DROP CLEANOUT TO GRADE

NOT TO SCALE

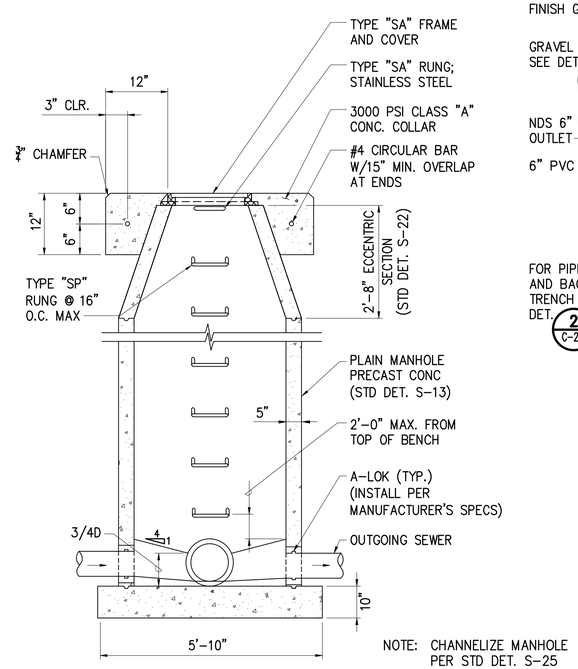

NOTE: CHANNELIZE MANHOLE PER STD DET. S-25

6 C-201 PRECAST SEWER MANHOLE

NOT TO SCALE

REVISION NO.	SYM.	DESCRIPTION	SHT./OF	DATE	APPROVED

YVONNE M. TURRO ☆ LICENSED PROFESSIONAL ENGINEER No. 11144-C ☆ HAWAII, U.S.A.

THIS LICENSE EXPIRES APRIL 30, 2024

SIGNATURE

THIS WORK WAS PREPARED BY ME OR UNDER MY SUPERVISION AND THE PRODUCTION OF THIS PROJECT WILL BE UNDER MY OBSERVATION, CORPORATION OF CONSTRUCTION AS DEFINED IN CHAPTER 16-115 OF THE HAWAII ADMINISTRATIVE RULES, DEPARTMENT OF COMMERCE AND CONSUMER AFFAIRS ENTITLED PROFESSIONAL ENGINEERS, ARCHITECTS, SURVEYORS AND LANDSCAPE ARCHITECTS).

STATE OF HAWAII
DEPARTMENT OF LAND AND NATURAL RESOURCES
ENGINEERING DIVISION

HAWAII DISTRICT LAND OFFICE
HILO, HAWAI'I

CIVIL DETAILS

DESIGNED: AA	SUBMITTED:
DRAWN: YT	DATE: NOVEMBER 2022
CHECKED: YT	SCALE: AS SHOWN
APPROVED: Carty Chang E-signed 2022-11-28 04:17PM HST carty.s.chang@hawaii.gov State of Hawaii Chief Engineer	DRAWING NO. C-201
CHIEF ENGINEER	

WASTEWATER DIVISION CHIEF

DATE

JOB NO. E00BH30A

SHEET NO. 12 OF 77 SHEETS

\\tlcg2019\Netshare\1 projects\42 - erskine\14224 - dlnr land div hq\DRAWINGS\DETAILS.dwg - 11/1/2022 3:10 PM

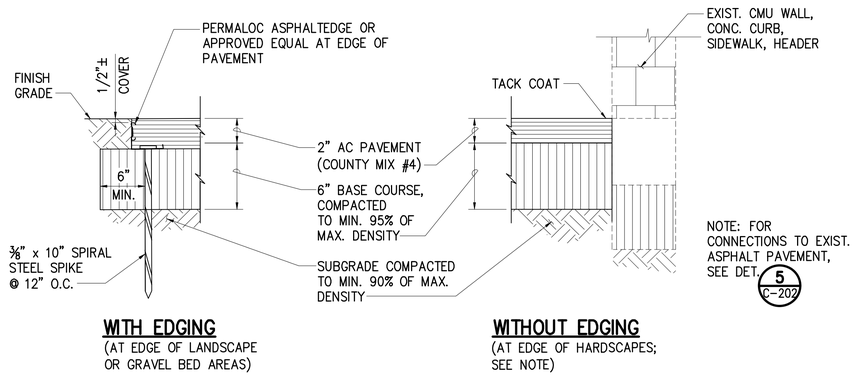

1 C-202 A.C. PAVEMENT DETAIL
NOT TO SCALE

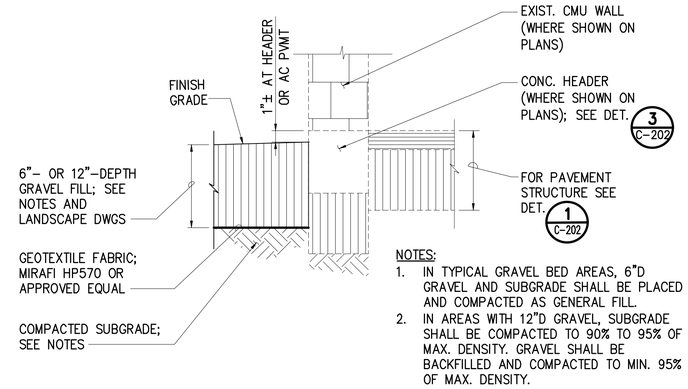

NOTES:
1. IN TYPICAL GRAVEL BED AREAS, 6"D GRAVEL AND SUBGRADE SHALL BE PLACED AND COMPACTED AS GENERAL FILL.
2. IN AREAS WITH 12"D GRAVEL, SUBGRADE SHALL BE COMPACTED TO 90% TO 95% OF MAX. DENSITY. GRAVEL SHALL BE BACKFILLED AND COMPACTED TO MIN. 95% OF MAX. DENSITY.

2 C-202 GRAVEL BED DETAIL
NOT TO SCALE

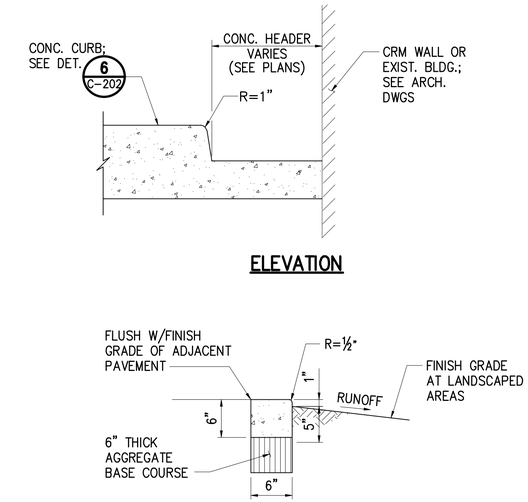

3 C-202 CONCRETE HEADER DETAIL
NOT TO SCALE

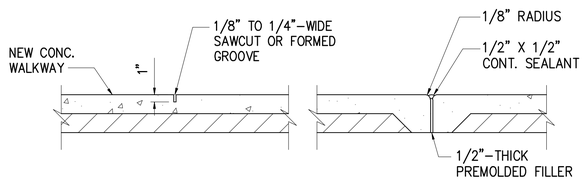

NOTES:
FOR CONCRETE SIDEWALKS, CURBS AND PAVEMENTS CONTRACTION JOINTS SHALL BE SPACED AT EVEN INTERVALS, MAX. 5 FT., AND EXPANSION JOINTS SHALL BE SPACED EVERY 40 FT. MAX., UNLESS OTHERWISE CALLED FOR IN THE PLANS.

4 C-202 CONCRETE JOINT DETAIL
NOT TO SCALE

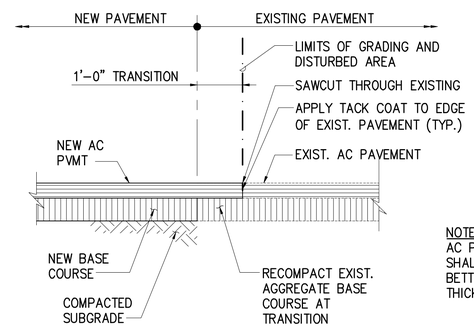

NOTE:
AC PAVEMENT STRUCTURE SHALL BE EQUAL TO OR BETTER THAN EXISTING IN THICKNESS AND QUALITY.

5 C-202 SMOOTH RIDING CONNECTION DETAIL
NOT TO SCALE

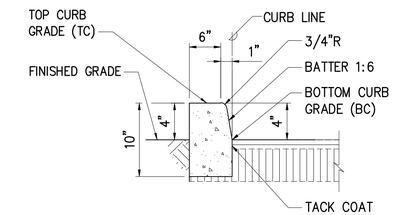

6 C-202 CONCRETE CURB DETAIL
NOT TO SCALE

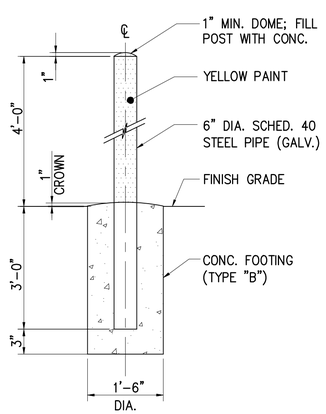

SECTION
NOT TO SCALE

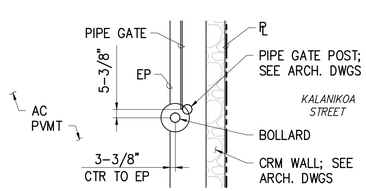

FRONT PARKING BOLLARD PLAN
SCALE: 1/4" = 1'-0"

7 C-202 BOLLARD DETAIL
AS NOTED

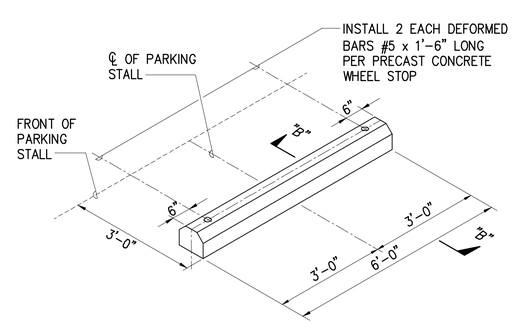

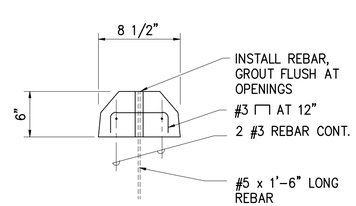

SECTION B-B

8 C-202 WHEEL STOP DETAIL
NOT TO SCALE

REVISION NO.	SYM.	DESCRIPTION	SHT./OF	DATE	APPROVED

YVONNE M. TURRO — LICENSED PROFESSIONAL ENGINEER No. 11144-C — HAWAII, U.S.A.

THIS LICENSE EXPIRES APRIL 30, 2024

SIGNATURE

THIS WORK WAS PREPARED BY ME OR UNDER MY SUPERVISION AND FOR THE PURPOSE OF THIS PROJECT WILL BE UNDER MY OBSERVATION, OBSERVATION OF CONSTRUCTION AS DEFINED IN CHAPTER 16-115 OF THE HAWAII ADMINISTRATIVE RULES, DEPARTMENT OF COMMERCE AND CONSUMER AFFAIRS ENTITLED PROFESSIONAL ENGINEERS, ARCHITECTS, SURVEYORS AND LANDSCAPE ARCHITECTS).

STATE OF HAWAII
DEPARTMENT OF LAND AND NATURAL RESOURCES
ENGINEERING DIVISION

HAWAII DISTRICT LAND OFFICE
HILO, HAWAI'I

CIVIL DETAILS

DESIGNED: AA	SUBMITTED:
DRAWN: YT	DATE: NOVEMBER 2022
CHECKED: YT	SCALE: AS SHOWN
APPROVED: Carty Chang E-signed 2022-11-28 04:17PM HST carty.s.chang@hawaii.gov State of Hawaii Chief Engineer	DRAWING NO. C-202
CHIEF ENGINEER	

JOB NO. E00BH30A

\\tlcg2019\Netshare\1 projects\42 - erskine\14224 - dlnr land div hq\DRAWINGS\DETAILS.dwg - 11/1/2022 3:10 PM

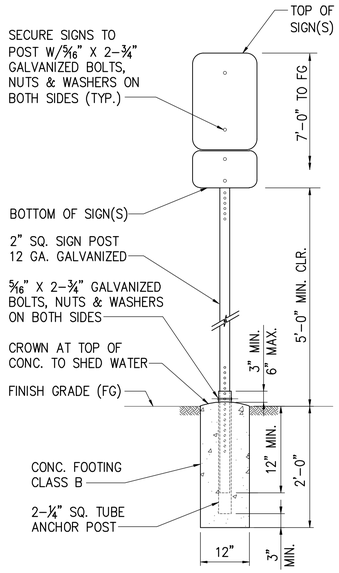

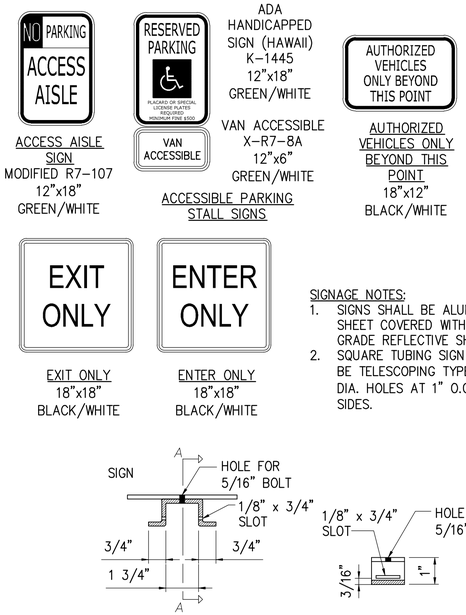

1 / C-203 SITE SIGNAGE DETAILS

NOT TO SCALE

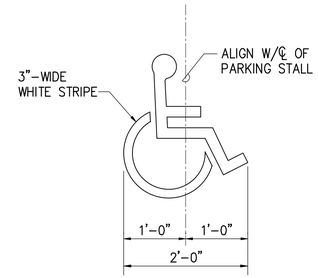

NOTE:
REFER TO 2004 MUTCD "STANDARD HIGHWAY SIGNS" FOR INTERNATIONAL SYMBOL OF ACCESSIBILITY (ISA) PAVEMENT MARKING DETAILS.

2 / C-203 ISA PAVEMENT MARKING DETAIL

NOT TO SCALE

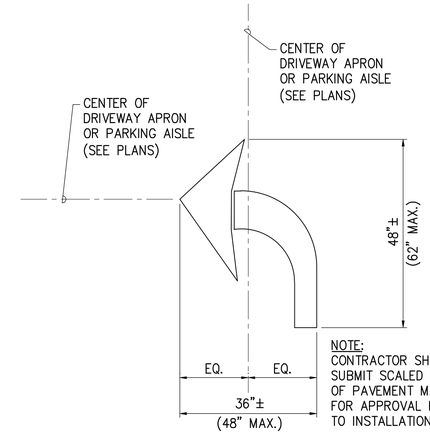

NOTE:
CONTRACTOR SHALL SUBMIT SCALED DRAWING OF PAVEMENT MARKING FOR APPROVAL PRIOR TO INSTALLATION.

3 / C-203 TURN ARROW DETAIL

NOT TO SCALE

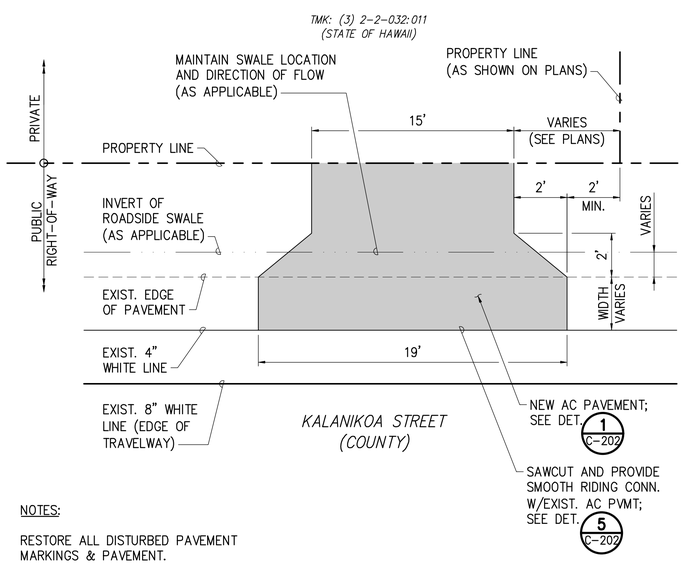

NOTES:

RESTORE ALL DISTURBED PAVEMENT MARKINGS & PAVEMENT.

4 / C-203 DRIVEWAY APRON DETAIL

NOT TO SCALE

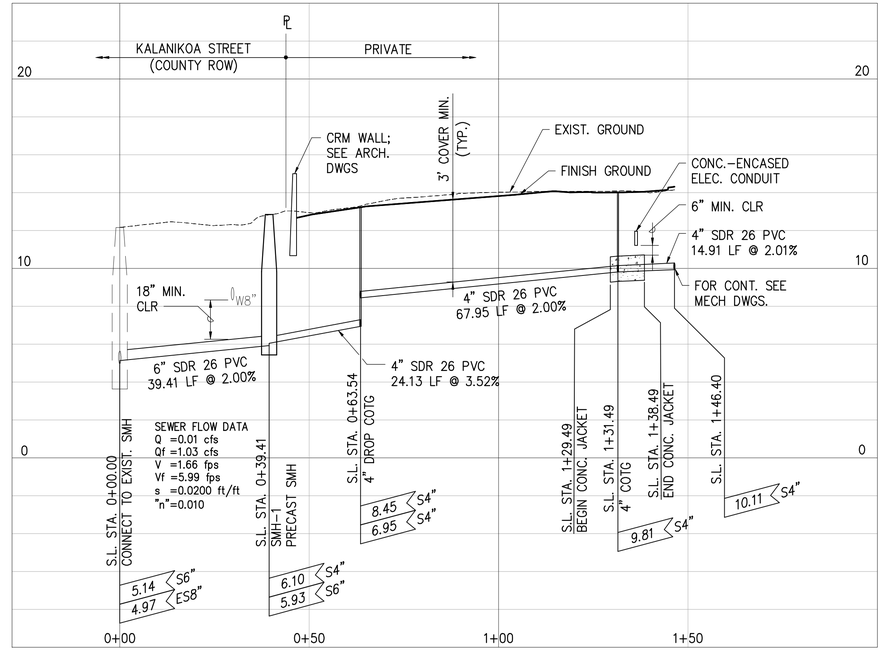

5 / C-203 SEWER PROFILE

SCALE: HORZ. 1"=20'
VERT. 1"=4'

WASTEWATER DIVISION CHIEF

DATE

REVISION NO.	SYM.	DESCRIPTION	SHT./OF	DATE	APPROVED

YVONNE M. TURRO
LICENSED PROFESSIONAL ENGINEER
No. 11144-C
HAWAII, U.S.A.

THIS LICENSE EXPIRES APRIL 30, 2024

SIGNATURE

THIS WORK WAS PREPARED BY ME OR UNDER MY SUPERVISION AND CONSTRUCTION OF THIS PROJECT WILL BE UNDER MY OBSERVATION. (OBSERVATION OF CONSTRUCTION FOR COMPLIANCE WITH PLANS IS NOT THE HAWAII ADMINISTRATIVE RULES, DEPARTMENT OF COMMERCE AND CONSUMER AFFAIRS ENTITLED PROFESSIONAL ENGINEERS, ARCHITECTS, SURVEYORS AND LANDSCAPE ARCHITECTS).

STATE OF HAWAII
DEPARTMENT OF LAND AND NATURAL RESOURCES
ENGINEERING DIVISION

HAWAII DISTRICT LAND OFFICE
HILO, HAWAI'I

CIVIL DETAILS

DESIGNED: AA	SUBMITTED:
DRAWN: YT	DATE: NOVEMBER 2022
CHECKED: YT	SCALE: AS SHOWN
APPROVED: Carty Chang E-signed 2022-11-28 04:17PM HST carty.s.chang@hawaii.gov State of Hawaii Chief Engineer	DRAWING NO. C-203
CHIEF ENGINEER	

JOB NO. E00BH30A

SHEET NO. 14 OF 77 SHEETS

\\tlcg2019\Netshare\1_projects\42 - erskine\14224 - dlnr land div hq\DRAWINGS\DETAILS.dwg - 11/1/2022 3:10 PM

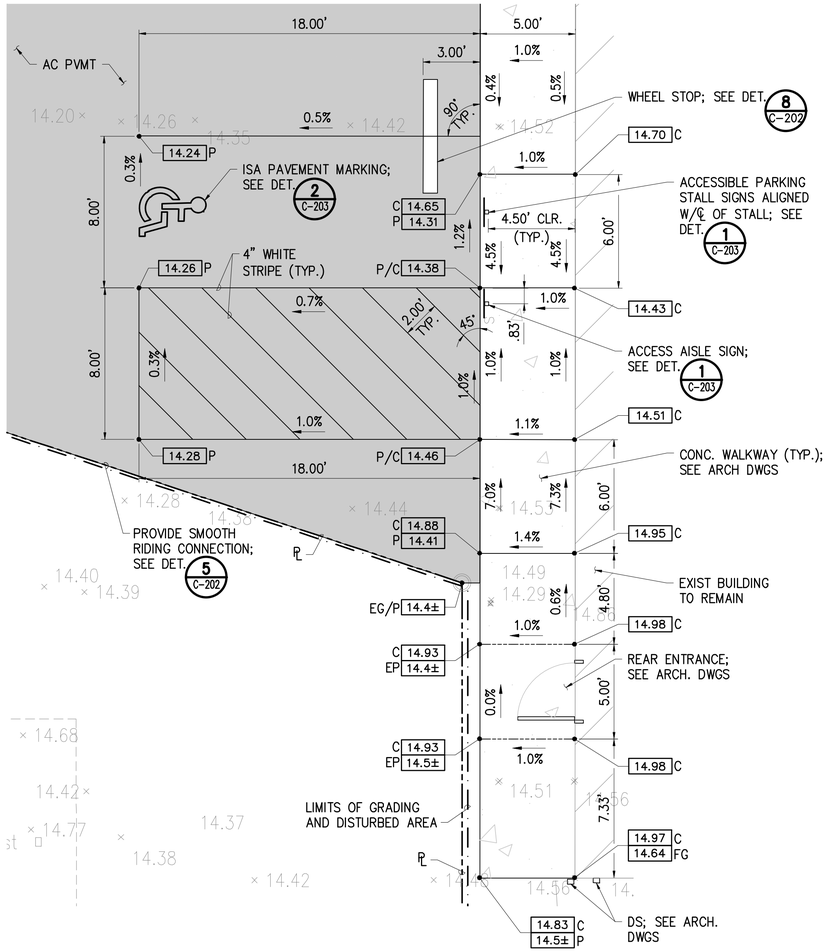

1 C-204 REAR ACCESSIBLE PARKING PLAN

SCALE: 3"=1'

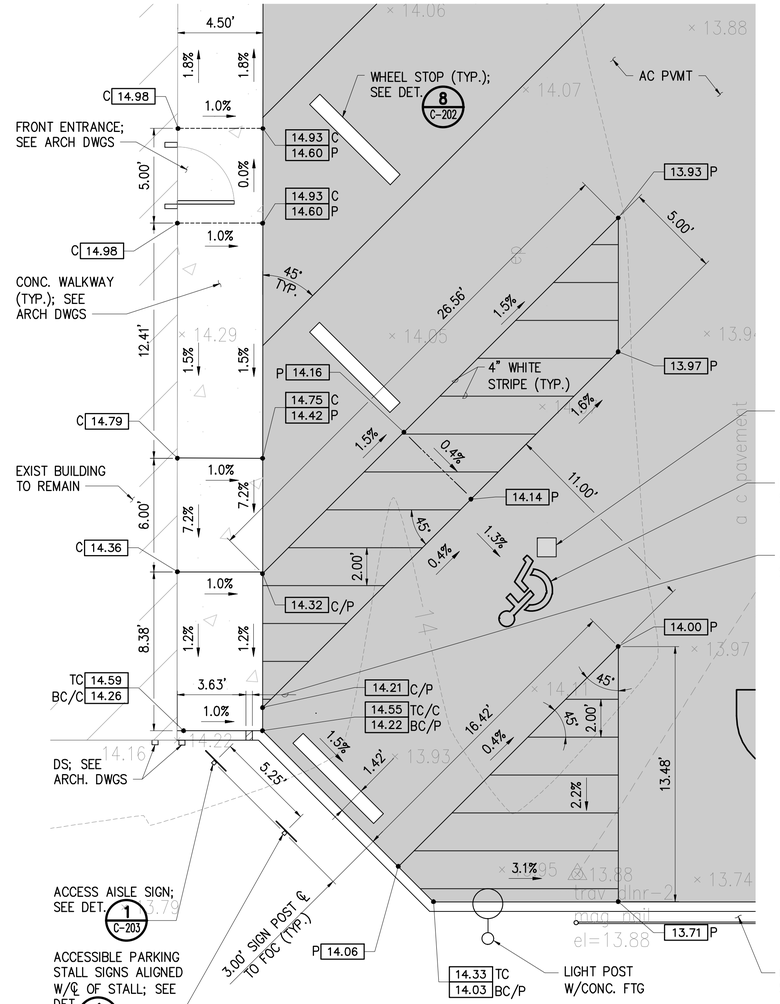

2 C-204 FRONT ACCESSIBLE PARKING PLAN

SCALE: 3"=1'

ADA PARKING AREA NOTES:

1. DESIGN SLOPE FOR ACCESSIBLE PARKING SPACES, ACCESS AISLES AND ACCESSIBLE ROUTES ARE LESS THAN THE MAXIMUM SLOPES ALLOWED BY THE ADA ACCESSIBILITY GUIDELINES. SLOPES INSTALLED IN EXCESS OF THE REGULATION MAXIMUM WILL BE CONSIDERED DEFECTIVE WORK, AND SHALL BE CORRECTED AT NO ADDITIONAL COST TO THE STATE.
2. MAXIMUM CONSTRUCTED SLOPES ARE AS FOLLOWS:
   A. ACCESSIBLE PARKING SPACES, ACCESS AISLES, LANDINGS
      2.0% IN ANY DIRECTION
   B. RAMP
      8.3% RUNNING
      2.0% CROSS SLOPE
   C. ACCESSIBLE ROUTE
      5.0% RUNNING
      2.0% CROSS SLOPE.

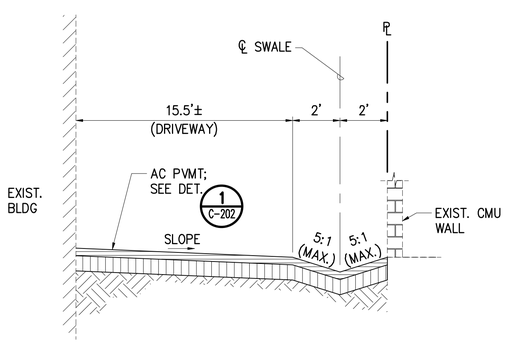

3 C-204 DRIVEWAY SECTION

NOT TO SCALE

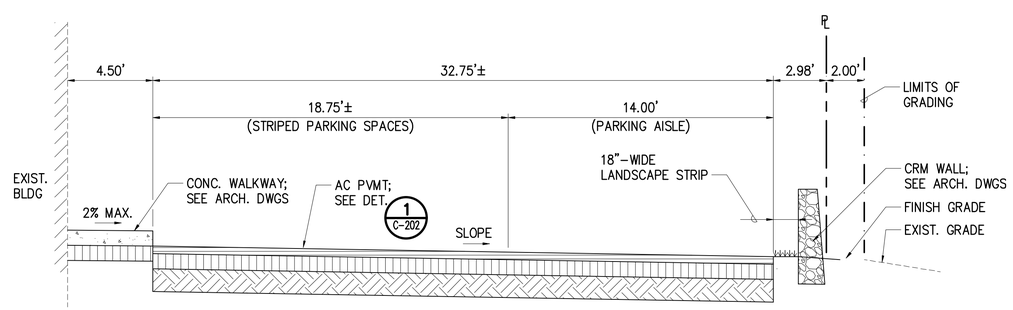

4 C-204 FRONT PARKING SECTION

NOT TO SCALE

REVISION NO.	SYM.	DESCRIPTION	SHT./OF	DATE	APPROVED

YVONNE M. TURRO LICENSED PROFESSIONAL ENGINEER No. 11144-C HAWAII, U.S.A.

THIS LICENSE EXPIRES APRIL 30, 2024

SIGNATURE

THIS WORK WAS PREPARED BY ME OR UNDER MY SUPERVISION AND CONSTRUCTION OF THIS PROJECT WILL BE UNDER MY OBSERVATION, INSPECTION OF CONSTRUCTION AS DEFINED IN CHAPTER 16-115 OF THE STATE OF HAWAII DEPARTMENT OF BANKING AND COMMERCE, AND CONSUMER AFFAIRS ENTITLED PROFESSIONAL ENGINEERS, ARCHITECTS, SURVEYORS AND LANDSCAPE ARCHITECTS).

STATE OF HAWAII
DEPARTMENT OF LAND AND NATURAL RESOURCES
ENGINEERING DIVISION

HAWAII DISTRICT LAND OFFICE
HILO, HAWAI'I

CIVIL DETAILS

DESIGNED: AA	SUBMITTED:
DRAWN: YT	DATE: NOVEMBER 2022
CHECKED: YT	SCALE: AS SHOWN
APPROVED: CHIEF ENGINEER	DRAWING NO. C-204

Carty Chang
E-signed 2022-11-28 04:17PM HST
carty.s.chang@hawaii.gov
State of Hawaii
Chief Engineer

JOB NO. E00BH30A

\\ttcg2019\Netshare\1 projects\42 - erskine\14224 - dlnr land div hq\DRAWINGS\DETAILS.dwg - 11/1/2022 3:10 PM

GENERAL NOTES FOR TRAFFIC CONTROL PLAN:

1. TEMPORARY TRAFFIC CONTROL WORK SHALL BE DONE IN ACCORDANCE WITH THE "MANUAL ON UNIFORM TRAFFIC CONTROL DEVICES," 2009 EDITION 4 REVISION 1 AND 2 INCORPORATED, DATED MAY 2012, AS AMENDED.
2. THE CONTRACTOR SHALL PROVIDE, INSTALL, AND MAINTAIN ALL NECESSARY SIGNS AND OTHER PROTECTIVE FACILITIES IN CONFORMANCE WITH THE HAWAII ADMINISTRATIVE RULES 19-129 "USE OF TRAFFIC CONTROL DEVICES AT WORK SITES ON OR ADJACENT TO PUBLIC STREET AND HIGHWAYS".
3. THE PERMITTEE SHALL MAKE MINOR ADJUSTMENTS AT INTERSECTIONS, DRIVEWAYS, BRIDGES, STRUCTURES, ETC., TO FIT FIELD CONDITIONS.
4. CONES OR DELINEATORS SHALL BE EXTENDED TO A POINT WHERE THEY ARE VISIBLE TO APPROACHING TRAFFIC.
5. TRAFFIC CONTROL DEVICES SHALL BE INSTALLED SUCH THAT THE SIGN OR DEVICE FARTHEST FROM THE WORK AREA IS PLACED FIRST. THE OTHERS SHALL THEN BE PLACED PROGRESSIVELY TOWARD THE WORK AREA.
6. REGULATORY AND WARNING SIGNS WITHIN THE CONSTRUCTION ZONE THAT ARE IN CONFLICT WITH THE TRAFFIC CONTROL PLANS SHALL BE REMOVED OR COVERED.
7. FLAGGERS AND/OR POLICE OFFICERS SHALL BE IN SIGHT OF EACH OTHER OR IN DIRECT COMMUNICATION AT ALL TIMES. THE CONTRACTOR SHALL COORDINATE AND HIRE SPECIAL DUTY POLICE OFFICER(S) AS NEEDED TO PROVIDE TRAFFIC CONTROL WHILE WORKING WITHIN THE COUNTY RIGHT OF WAY.
8. WHEN REQUIRED BY THE ISSUING OFFICE, THE PERMITTEE SHALL INSTALL A FLASHING ARROW SIGNAL AS SHOWN ON THE TRAFFIC CONTROL PLANS.
9. ALL TRAFFIC LANES SHALL BE A MINIMUM OF 10 FEET WIDE.
10. ALL CONSTRUCTION WARNING SIGNS SHALL BE PROMPTLY REMOVED OR COVERED WHENEVER THE MESSAGE IS NOT APPLICABLE OR NOT IN USE.
11. THE BACKS OF ALL SIGNS USED FOR TRAFFIC CONTROL SHALL BE APPROPRIATELY COVERED TO PRECLUDE THE DISPLAY OF INAPPLICABLE SIGN MESSAGES (I.E., WHEN SIGNS HAVE MESSAGES ON BOTH FACES).
12. LANE CLOSURE SHALL BE LIMITED ONLY TO THE EXTENT OF ACCOMPLISHING EACH DAY'S WORK. AS SOON AS EACH DAY'S WORK IS COMPLETED, THE PERMITTEE SHALL REMOVE ALL TRAFFIC CONTROL DEVICES NO LONGER NEEDED TO PERMIT FREE AND SAFE PASSAGE OF PUBLIC TRAFFIC. REMOVAL SHALL BE IN THE REVERSE ORDER OF INSTALLATION. EXISTING FADED OR OBLITERATED PAVEMENT MARKINGS THAT ARE NECESSARY FOR SAFE TRAFFIC FLOW IN THE CONSTRUCTION AREA SHALL BE REPLACED WITH TEMPORARY OR PERMANENT MARKINGS BEFORE OPENING THE ROADWAY TO PUBLIC TRAFFIC EACH DAY.
13. PERMANENT PAVEMENT MARKINGS AND TRAFFIC SIGNS SHALL BE REPLACED UPON COMPLETION OF EACH PHASE OF WORK.
14. CONES AND DELINEATORS SHALL BE SPACED AT A MAXIMUM DISTANCE OF 20 FEET APART. A MINIMUM OF SIX CHANNELIZING DEVICES SHALL BE USED FOR EACH TAPER LENGTH.
15. DRIVEWAYS SHALL BE KEPT OPEN UNLESS THE OWNERS OF THE PROPERTY USING THE RIGHT-OF-WAY ARE OTHERWISE PROVIDED FOR SATISFACTORILY. FURTHER, THE PERMITTEE SHALL CONTROL TRAFFIC GOING IN AND OUT OF DRIVEWAYS.
16. BUFFER AND TAPER AREAS ON APPROACH TO ANY WORK AREA SHALL BE KEPT CLEAR OF VEHICLES AND EQUIPMENT.
17. TRAFFIC CONTROL PLANS ARE APPROVED FOR WORK ON ANY COUNTY STREET AREA BETWEEN THE HOURS OF 8:30 A.M. AND 3:30 P.M. FOR NORMAL WORK HOURS MONDAY THROUGH FRIDAY.
18. WHERE PAVED SHOULDERS EXIST, MAINTAIN A MINIMUM 36-INCH WIDE CLEAR ACCESSIBLE ROUTE IN ACCORDANCE WITH AMERICANS WITH DISABILITIES ACT ACCESSIBILITY GUIDELINES SECTION 4.3.

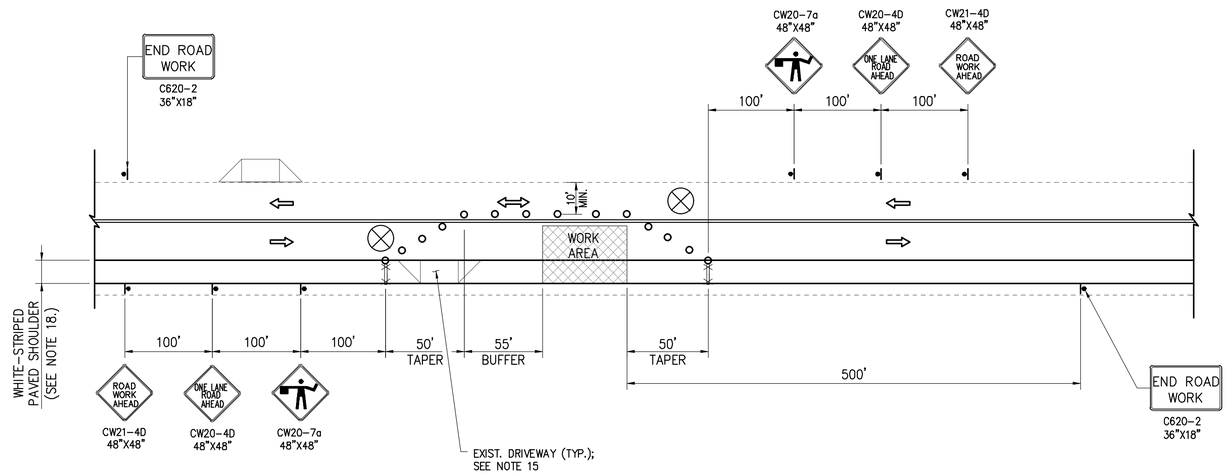

TYPICAL TRAFFIC CONTROL FOR TWO-LANE ROADS

NOT TO SCALE

POSTED SPEED LIMIT : 25 MPH

CONE, DELINEATOR, AND BARRICADE SPACING:
10' O.C. FOR WORK AREAS
20' O.C. FOR TAPERS AND BUFFERS

LEGEND

- TRAFFIC CONE W/REFLECTIVE COLLAR
- SIGN
- DIRECTION OF TRAFFIC
- DOUBLE-YELLOW STRIPED ROAD CENTERLINE
- EDGE OF PAVEMENT
- WORK AREA
- FLAGMAN
- TYPE II BARRICADE W/STEADY BURN

REVISION NO.	SYM.	DESCRIPTION	SHT./OF	DATE	APPROVED

YVONNE M. TURRO
LICENSED PROFESSIONAL ENGINEER
No. 11144-C
HAWAII, U.S.A.

THIS LICENSE EXPIRES APRIL 30, 2024

SIGNATURE

THIS WORK WAS PREPARED BY ME OR UNDER MY SUPERVISION AND CONSTRUCTION OF THIS PROJECT WILL BE UNDER MY OBSERVATION. (OBSERVATION OF CONSTRUCTION AS DEFINED IN CHAPTER 16-115 OF THE STATE OF HAWAII DEPARTMENT OF COMMERCE AND CONSUMER AFFAIRS ENTITLED PROFESSIONAL ENGINEERS, ARCHITECTS, SURVEYORS AND LANDSCAPE ARCHITECTS).

STATE OF HAWAII
DEPARTMENT OF LAND AND NATURAL RESOURCES
ENGINEERING DIVISION

HAWAII DISTRICT LAND OFFICE
HILO, HAWAI'I

TRAFFIC CONTROL PLAN

DESIGNED: AA	SUBMITTED:
DRAWN: YT	DATE: NOVEMBER 2022
CHECKED: YT	SCALE: AS SHOWN
APPROVED: CHIEF ENGINEER	DRAWING NO. C-300

Carty Chang
E-signed 2022-11-28 04:17PM HST
carty.s.chang@hawaii.gov
State of Hawaii
Chief Engineer

JOB NO. E00BH30A

\\tlcg2019\Netshare\1 projects\42 - erskine\14224 - dlnr land div hq\DRAWINGS\TCP.dwg - 10/3/2022 2:13 PM

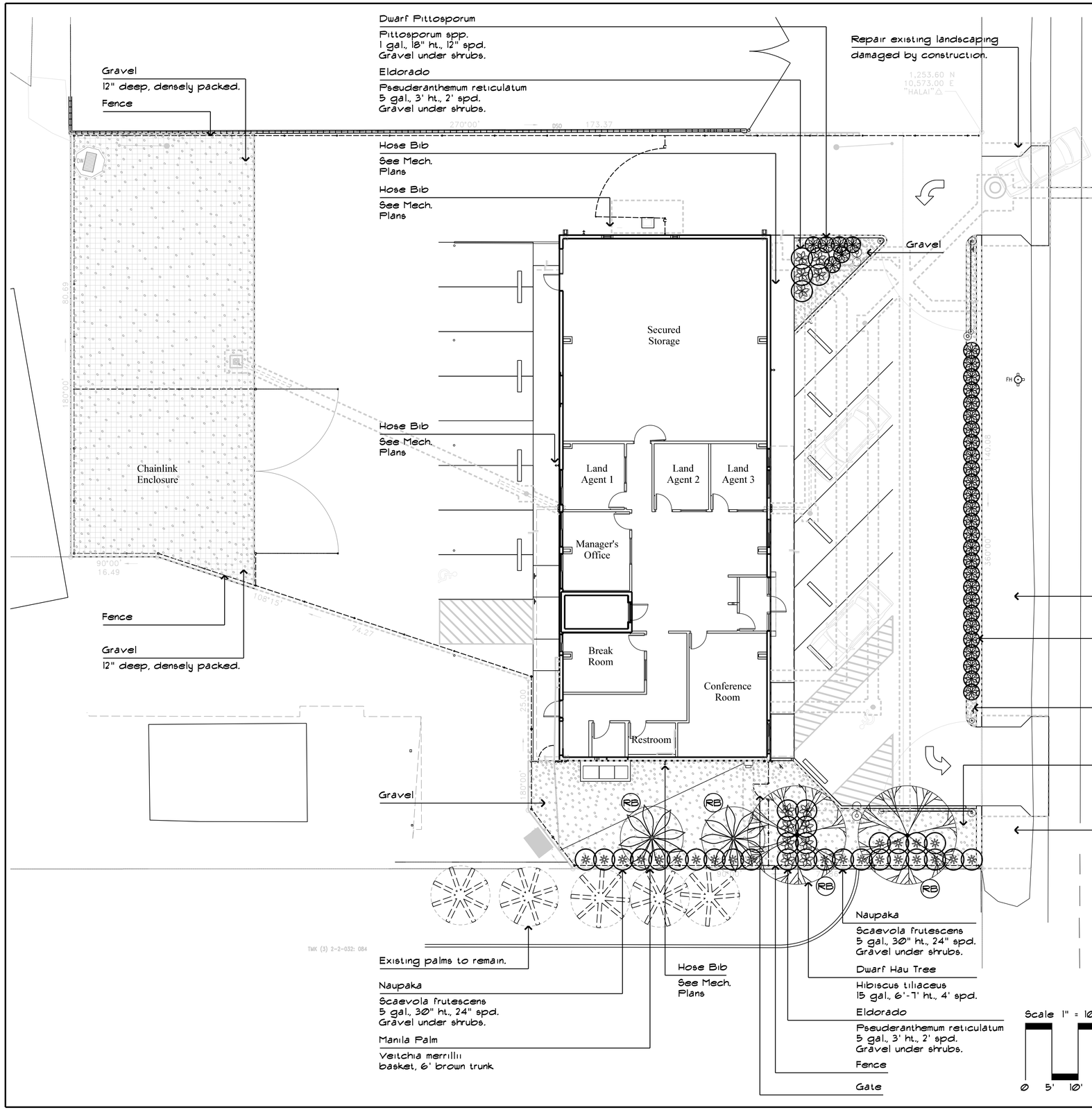

Landscape Notes

1 - Verify and be aware of all utilities during all phases of work. See civil, architectural, electrical, and mechanical drawings.
2 - Coordinate all work with the General Contractor.
3 - Topsoil and Backfill Mix shall be from 'Soil Plus'. 30% black cinder, 40% soil, and 30% well aged macnut husk. Soil shall test at 6.5-6.8 pH. Provide soil pH report.
4 - Install 12" min. of topsoil over all planting areas (tree and shrub areas). Landscape Contractor shall be responsible for grading of subgrade to allow for 12" of topsoil.
5 - Verify all plant materials with the Landscape Architect prior to purchasing.
6 - Landscape Contractor shall provide for a 120 day maintenance period. Plants shall be maintained in a manner conducive to thier health and growth.
7 - Trim all trees and palms during construction and during and at the end of the maintenance period. Trim palms to remove dead or broken fronds and fruit during construction.
8 - All trees shall be planted with top of root balls 1"-2" above finish grade of surrounding area. Verify that actual top of rootball is where top of roots are attached to trunk, scrape back soil on every tree or shrub to verify before planting.
9 - Gravel shall be 'blue rock', 1" dia., no fines, 6" layer. Gravel within and adjacent to the chainlink enclosure shall be 12" deep, densely packed gravel bed. Coordinate grading of subgrade with the General Contractor. Verify gravel with the Landscape Architect prior to purchasing.
10- All plant material shall be free of Coqui Frog infestation. It is the responsibility of the Landscape Contractor to monitor and remove all Coqui Frogs from the site during the landscape installation and maintenance period.
11 - Provide temporary irrigation hook-up and a temporary irrigation system to establish all landscape planting. Coordinate with General Contractor to have a temporary irrigation hook-up. Provide a approved backflow prevention device for the temporary irrigation system. Temporary irrigation to be removed at the completion of the formal maintenance period.
12- Install 'Deeproot' root barriers or approved equal, 36" height, on all trees or palms with conflicts with utility lines. Follow manufacturer's installation instructions.
13- Install 'Deeproot' root barriers or approved equal, 36" height on all trees or palms labeled with RB. Follow manufacturer installation instructions.
14- Repair existing landscaping damaged by construction. Landscape Contractor shall be responsible for restoring right-of-way landscaping to original or better condition.

REVISION NO.	SYM.	DESCRIPTION	SHT./OF	DATE	APPROVED

KYLE K. TENGAN
LICENSED PROFESSIONAL LANDSCAPE ARCHITECT
No. 12622
HAWAII, U.S.A.

THIS LICENSE EXPIRES APRIL 30, 2024
SIGNATURE

THIS WORK WAS PREPARED BY ME, OR UNDER MY SUPERVISION AND CONSTRUCTION OF THIS PROJECT WILL BE UNDER MY OBSERVATION. (OBSERVATION OF CONSTRUCTION AS DEFINED IN CHAPTER 16-115 OF THE HAWAII ADMINISTRATIVE RULES, DEPARTMENT OF COMMERCE AND CONSUMER AFFAIRS, ENTITLED PROFESSIONAL ENGINEERS, ARCHITECTS, SURVEYORS AND LANDSCAPE ARCHITECTS).

STATE OF HAWAII
DEPARTMENT OF LAND AND NATURAL RESOURCES
ENGINEERING DIVISION

HAWAII DISTRICT LAND OFFICE
HILO, HAWAI'I

Landscape Plan

DESIGNED: KKT	SUBMITTED:
DRAWN: KKT	DATE: NOVEMBER 2022
CHECKED:	SCALE: AS NOTED
APPROVED:	DRAWING NO. L-100
CHIEF ENGINEER	

Carty Chang
E-signed 2022-11-28 04:17PM HST
carty.s.chang@hawaii.gov
State of Hawaii
Chief Engineer

JOB NO. E00BH30A

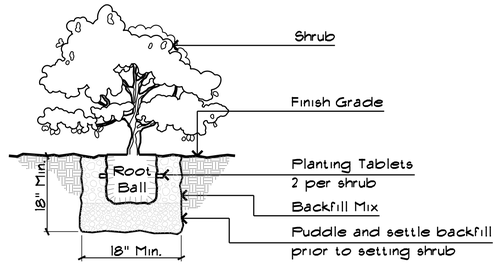

A / L-200 Shrub Detail
Not to scale

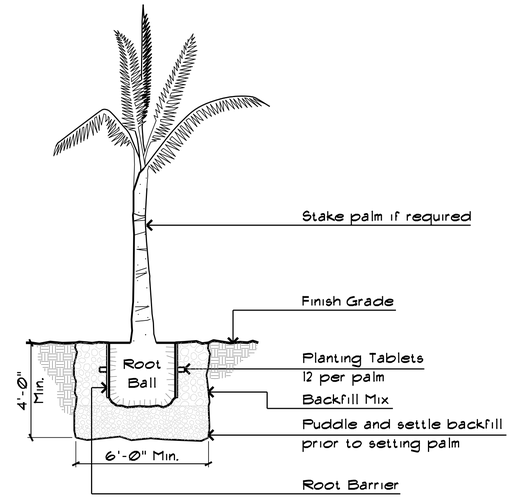

C / L-200 Palm Detail
Not to scale

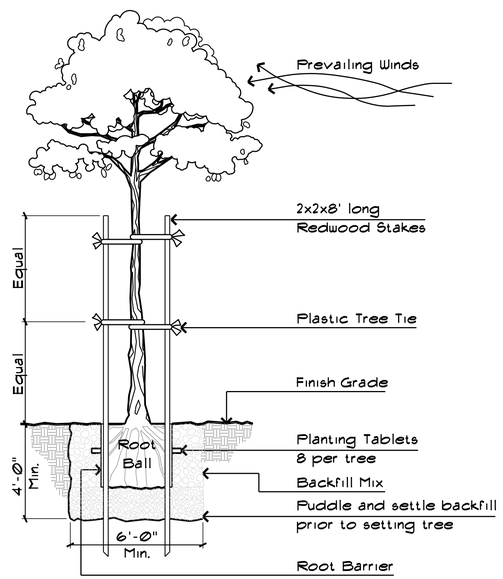

B / L-200 Tree Detail
Not to scale

REVISION NO.	SYM.	DESCRIPTION	SHT./OF	DATE	APPROVED

KYLE K. TENGAN
LICENSED PROFESSIONAL LANDSCAPE ARCHITECT
No. 12622
HAWAII, U.S.A.

LICENSE EXPIRES: APRIL 30, 2024
SIGNATURE

THIS WORK WAS PREPARED BY ME OR UNDER MY SUPERVISION AND CONSTRUCTION OF THIS PROJECT WILL BE UNDER MY OBSERVATION. (OBSERVATION OF CONSTRUCTION AS DEFINED IN CHAPTER 16-115 OF THE HAWAII ADMINISTRATIVE RULES, DEPARTMENT OF COMMERCE AND CONSUMER AFFAIRS ENTITLED "PROFESSIONAL ENGINEERS, ARCHITECTS, SURVEYORS AND LANDSCAPE ARCHITECTS).

STATE OF HAWAII
DEPARTMENT OF LAND AND NATURAL RESOURCES
ENGINEERING DIVISION

HAWAII DISTRICT LAND OFFICE
HILO, HAWAI'I

Landscape Details

DESIGNED: KKT	SUBMITTED:
DRAWN: KKT	DATE: NOVEMBER 2022
CHECKED:	SCALE: AS NOTED
APPROVED:	DRAWING NO. L-200

Carty Chang
E-signed 2022-11-28 04:17PM HST
carty.s.chang@hawaii.gov
State of Hawaii
Chief Engineer
CHIEF ENGINEER

GENERAL NOTES

1. ALL WORK SHOWN IS NEW UNLESS OTHERWISE NOTED.
2. SEE SHEET T-002 FOR ADDITIONAL NOTES AND REQUIREMENTS.
3. SEE CIVIL, LANDSCAPE, STRUCTURAL, MECHANICAL, & ELECTRICAL DRAWINGS FOR ADDITIONAL REQUIREMENTS.
4. CONCRETE/ASPHALT PAVED WALKWAYS SHALL NOT EXCEED THE FOLLOWING SLOPES:
   - IN DIRECTION OF TRAVEL 1:20, UNLESS OTHERWISE NOTED.
   - CROSS SLOPE OF 1:50.
5. ALL NON-PAVED AREAS DAMAGED AS A RESULT OF NEW WORK SHALL BE RE-PLANTED W/GRASS TO MATCH EXST. ADJACENT GRASS AREAS.
6. CONTRACTOR SHALL TONE ALL AREAS PRIOR TO PERFORMING ANY TRENCHING & EXCAVATION WORK. CONTRACTOR WILL BE RESPONSIBLE TO CORRECT ANY DAMAGE THAT OCCURS TO ANY UTILITY/POWER/COMMUNICATIONS LINES & OTHER BURIED INFRASTRUCTURE WITHOUT ADDITIONAL COMPENSATION.
7. ALL DIMENSIONS ARE TAKEN FROM THE FACE OF FINISH UNLESS OTHERWISE NOTED.
8. CONTRACTOR SHALL PAINT ALL UNFINISHED SURFACES, UNLESS OTHERWISE NOTED.

LEGEND

- ASPHALT PAVING
- 6" GRAVEL BED
- 12" DEEP THICK PACKED GRAVEL BED
- LAMP POST
- DS DOWNSPOUT
- DS DOWNSPOUT W/SPLASH BLOCK
- UTILITY POLE & GUY ANCHOR
- HB HOSE BIB
- SEWER MAN HOLE
- CO CLEAN OUT

KEYNOTES (THIS SHEET)

KEYNOTE NO.	
1	CONC SIDEWALK. RAMP FOR ADA PARKING STALL ACCESS.
2	AC PAVING. PAINT PARKING STRIPES AND WHEEL STOP, SEE CIVIL DRWG.
3	AC PAVING SWALE. SEE CIVIL DRWG.
4	DOWNSPOUT & SPLASH BLOCK.
5	8'-0" H CHAIN LINK FENCE.
6	PIPE GATE W/ RECEIVING POSTS.
7	BOLLARD, SEE CIVIL DRWG.
8	GATE OPERATOR PAD FOR 8'-0" H ELECTRONIC GATE W/ GATE WHEEL, WELDED CHAINS, PADLOCK & MAGLOCK.
9	CONC MECHANICAL EQUIPMENT PAD FOR ACCU, SEE MECH DRWG.
10	LANDSCAPED AREA, SEE LAND DRWG.
11	CRM WALL.
12	EXISTING HANDHOLE TO REMAIN.
13	8'-0" H CHAIN-LINK FENCE ENCLOSURE.
14	RELOCATED BACKFLOW PREVENTOR, SEE CIVIL DRWG.
15	ELECTRICAL METER & OVERHEAD POWER LINE, SEE ELEC DRWG.
16	6" DEEP GRAVEL BED. SEE CIVIL & LAND DRWG.
17	SITE SIGNAGE, SEE CIVIL DRWG.
18	EXIST DRYWELL, SEE CIVIL DRWG FOR WORK INSIDE DRYWELL.
19	EDGE OF EXISTING ROAD, SEE CIVIL DRWG.
20	AC PAVED DRIVEWAY. SEE CIVIL DRWG.
21	DOWNSPOUT.
22	UNDERGROUND DRAIN TO LANDSCAPING, SEE CIVIL DRWG.
23	PATCH & REPAIR EXST STREET. SEE CIVIL DRWG.
24	END 8'-0" HIGH CHAIN LINK FENCE.
25	CONC CURB CUT. SEE CIVIL DRWG.
26	CONC CURB. SEE CIVIL DRWG.
27	12" DEEP GRAVEL BED, SEE CIVIL & LAND DRWG.
28	DOWNSPOUT OVERFLOW STRUCTURE.
29	8'-0" HIGH x 3'-4" WIDE CHAIN LINK PEDESTRIAN GATE W/ U-LATCH & PADLOCK.
30	8'-0" HIGH CHAIN LINK ENCLOSURE W/ GATE WHEELS, STRONG ARM LATCH & PADLOCK.
31	EXTERIOR LAMP POST, SEE ELEC DRWG.
32	VALVE BOX, SEE CIVIL DRWG.
33	PRE-CAST CONC WHEEL STOP, TYP.
34	PRE-CAST SHALLOW DROP MANHOLE.
35	CONC JACKET BLW.
36	EXST UTILITY POLE & GUY WIRE TO REMAIN.

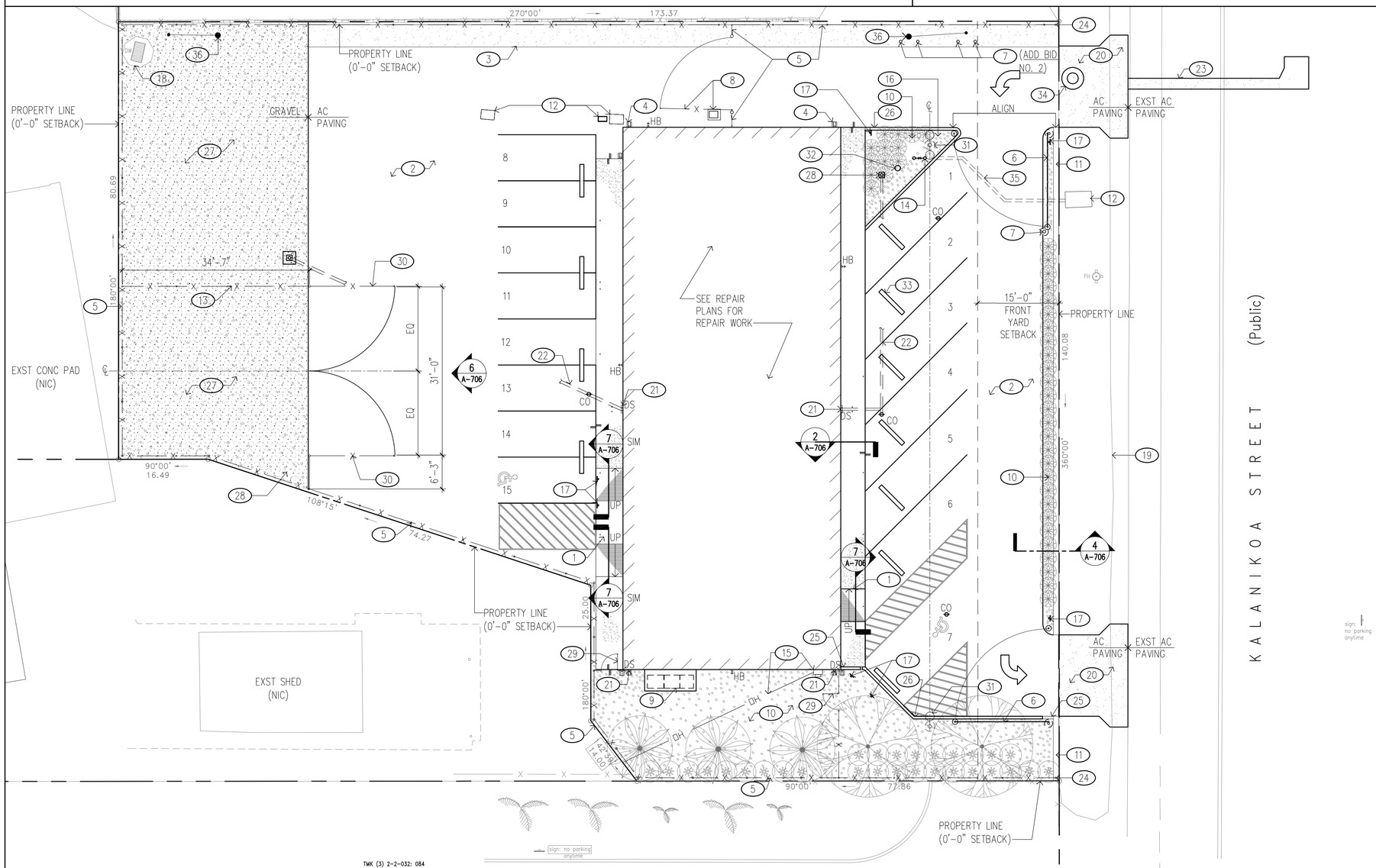

1 OVERALL SITE PLAN
SCALE: 3/32" = 1'-0"

0 4' 8' 12' 16' 20' 24' 28' 32'
SCALE: 3/32" = 1'-0"

NORTH WEST EAST SOUTH

REVISION NO.	SYM.	DESCRIPTION	SHT./OF	DATE	APPROVED

FRED K. ERSKINE LICENSED PROFESSIONAL ARCHITECT No. 10192 HAWAII, U.S.A.

THIS LICENSE EXPIRES APRIL 30, 2024

SIGNATURE

THIS WORK WAS PREPARED BY ME OR UNDER MY SUPERVISION AND CONSTRUCTION OF THIS PROJECT WILL BE UNDER MY OBSERVATION. (OBSERVATION OF CONSTRUCTION AS DEFINED IN CHAPTER 16-115 OF THE HAWAII ADMINISTRATIVE RULES, DEPARTMENT OF COMMERCE AND CONSUMER AFFAIRS, ENTITLED PROFESSIONAL ENGINEERS, ARCHITECTS, SURVEYORS AND LANDSCAPE ARCHITECTS).

STATE OF HAWAII
DEPARTMENT OF LAND AND NATURAL RESOURCES
ENGINEERING DIVISION

HAWAII DISTRICT LAND OFFICE
HILO, HAWAI'I

OVERALL SITE PLAN

DESIGNED: KK	SUBMITTED:
DRAWN: KA, TW, WL	DATE: FEBRUARY 2021
CHECKED: FE	SCALE: AS NOTED
APPROVED: Carty Chang E-signed 2022-11-28 04:17PM HST carty.s.chang@hawaii.gov State of Hawaii Chief Engineer	DRAWING NO. A-001
CHIEF ENGINEER	

DEMOLITION NOTES

1. SEE SHEET T-002 FOR ADDITIONAL NOTES & REQUIREMENTS.
2. PERFORM ALL DEMOLITION SO THAT EXISTING CONSTRUCTION TO REMAIN IS UNDAMAGED.
3. EXTENT OF REMOVAL AS INDICATED IS APPROXIMATE. CONTRACTOR SHALL VERIFY THE EXTENT OF REMOVAL WORK TO PROPERLY ACCOMMODATE THE METHOD OF REQUIRED NEW CONSTRUCTION. ADDITIONAL REMOVAL & PATCHING REQ'D TO ACCOMMODATE NEW CONSTRUCTION SHALL BE CONSIDERED INCIDENTAL TO THE NEW WORK CONTAINED HEREIN WITH NO ADDITIONAL COMPENSATION BEING PROVIDED.
4. PROPERLY PREPARE ALL SURFACES THAT ARE TO BE RE-PAINTED AS NEEDED TO MEET PRODUCT & MANUFACTURER'S REQUIREMENTS & RECOMMENDATIONS FOR A COMPLETE, SOUND & TIGHT JOB. ALLOW FOR CONSTRUCTION TOLERANCES IN ORDER TO MEET THE MINIMUM/MAXIMUM REQUIREMENTS AS SPECIFIED & INDICATED IN THE DRAWINGS & SPECIFICATIONS.
5. ALL DIMENSIONS SHOWN ARE APPROXIMATE & SHALL BE FIELD VERIFIED BY THE CONTRACTOR. SEE CIVIL, LANDSCAPE, STRUCTURAL, MECHANICAL & ELECTRICAL DRAWINGS FOR ADDITIONAL DEMOLITION REQUIREMENTS.
6. CONTRACTOR SHALL TONE ALL AREAS AFFECTED BY THE WORK PRIOR TO SAWCUTTING, TRENCHING, EXCAVATION, ETC. CONTRACTOR SHALL BE RESPONSIBLE FOR REPAIRING ANY DAMAGE THAT OCCURS TO ANY UTILITY/POWER/COMMUNICATIONS LINES & OTHER EXISTING INFRASTRUCTURE.
7. SEE HAZMAT REPORT AND SECTIONS IN SPECIFICATIONS FOR ABATEMENT WORK. CONTRACTOR IS RESPONSIBLE TO MEET THE REQUIREMENTS AS SPECIFIED & INDICATED IN THE DRAWINGS AND SPECIFICATIONS.
8. ACTUAL EXTENT OF GRADING, TRENCHING, & EXCAVATION IS NOT DEPICTED. THE CONTRACTOR SHALL DETERMINE THE ACTUAL EXTENT OF TRENCHING & EXCAVATION REQUIRED TO ACCOMMODATE THE INSTALLATION OF NEW ELEC., TELECOM, DRAIN LINES, WATER LINES, ETC. PRIOR TO BID SUBMITTAL. SEE CIVIL, MECHANICAL, AND ELECTRICAL DRAWINGS FOR ADDITIONAL INFORMATION.
9. EXTENT OF SAWCUTTING OF THE CONCRETE SLAB ON GRADE & EXCAVATION IS NOT DEPICTED. THE CONTRACTOR SHALL DETERMINE THAT ACTUAL EXTENT OF SAWCUTTING & EXCAVATION REQUIRED TO ACCOMMODATE THE WORK.
10. EXTENTS/LIMITS OF TRENCHING & EXCAVATION WORK IS NOT SHOWN. THE CONTRACTOR SHALL INCLUDE ALL COSTS FOR TRENCHING & EXCAVATION WORK TO RELOCATE BURIED INFRASTRUCTURE.
11. THE CONTRACTOR SHALL PROVIDE TEMPORARY BARRICADES AROUND WORK AREA DURING CONSTRUCTION.

LEGEND (THIS SHEET)

- INDICATES EXISTING TO REMAIN
- INDICATES EXISTING TO BE DEMOLISHED/REMOVED/ALTERED
- DEMO AC PAVING
- DEMO AC PAVING & PREPARE FOR GRAVEL BED/LANDSCAPING
- DEMO EXST CONC WALKWAY/RAMP.

KEYNOTES (THIS SHEET)

KEYNOTE NO.	
A	DEMO SIDEWALK, RAMP, & PAD COMPLETE.
B	DEMO AC PAVING & AGGREGATE, SEE CIVIL DRWGS.
C	DEMO DOWNSPOUT, SPLASH BLOCK, & DRAIN PIPE BELOW GRADE.
D	CHAIN-LINK FENCE & CMU WALL TO REMAIN.
E	SELECT DEMO & REMOVE CHAIN-LINK FENCE, GATE & CMU WALL WITHIN PROPERTY LINE.
F	DEMO ELEC EQUIPMENT & OVERHEAD POWER LINE, SEE ELEC DRWG. COORDINATE W/ HELCO AS REQ.
G	PREP AREA FOR GRAVEL BED, LANDSCAPING & LOW ROCK WALL. SEE CIVIL & LAND DRWG.
H	DEDUCTIVE BID NO. 1 – APPROXIMATE LOCATION OF CESSPOOL. ABANDON AND BACKFILL CESSPOOL. CAP SEWER LINE FROM BLDG, CONTRACTOR TO VERIFY LOCATION. SEE CIVIL DRWG.
J	TRENCH AS REQ'D FOR SEWER & WATER CONNECTION. SEE CIVIL AND MECH DRWG.
K	REMOVE DEBRIS WITHIN & AROUND DRY WELL. CONTRACTOR TO VERIFY DRY WELL IS OPERABLE, SEE CIVIL DRWG. IF INOPERABLE, NOTIFY THE STATE.
L	LINE OF ROOF ABOVE.
M	HANDHOLE TO REMAIN.
N	TRENCH AS REQ'D FOR DOWNSPOUT DRAINAGE. SEE CIVIL DRWG.
P	DEMO METAL POST & FOOTING COMPLETE, TYP.
Q	REMOVE & SALVAGE BACKFLOW PREVENTER. SEE CIVIL DRWG.
R	DEMO METAL WIRE PROTRUDING WALL.
S	PROVIDE TERMITE TREATMENT TO SITE AND BUILDING, SEE SPECIFICATIONS.
T	TRENCH AS REQ'D FOR SITE LIGHTING. SEE CIVIL AND ELEC DRWG.

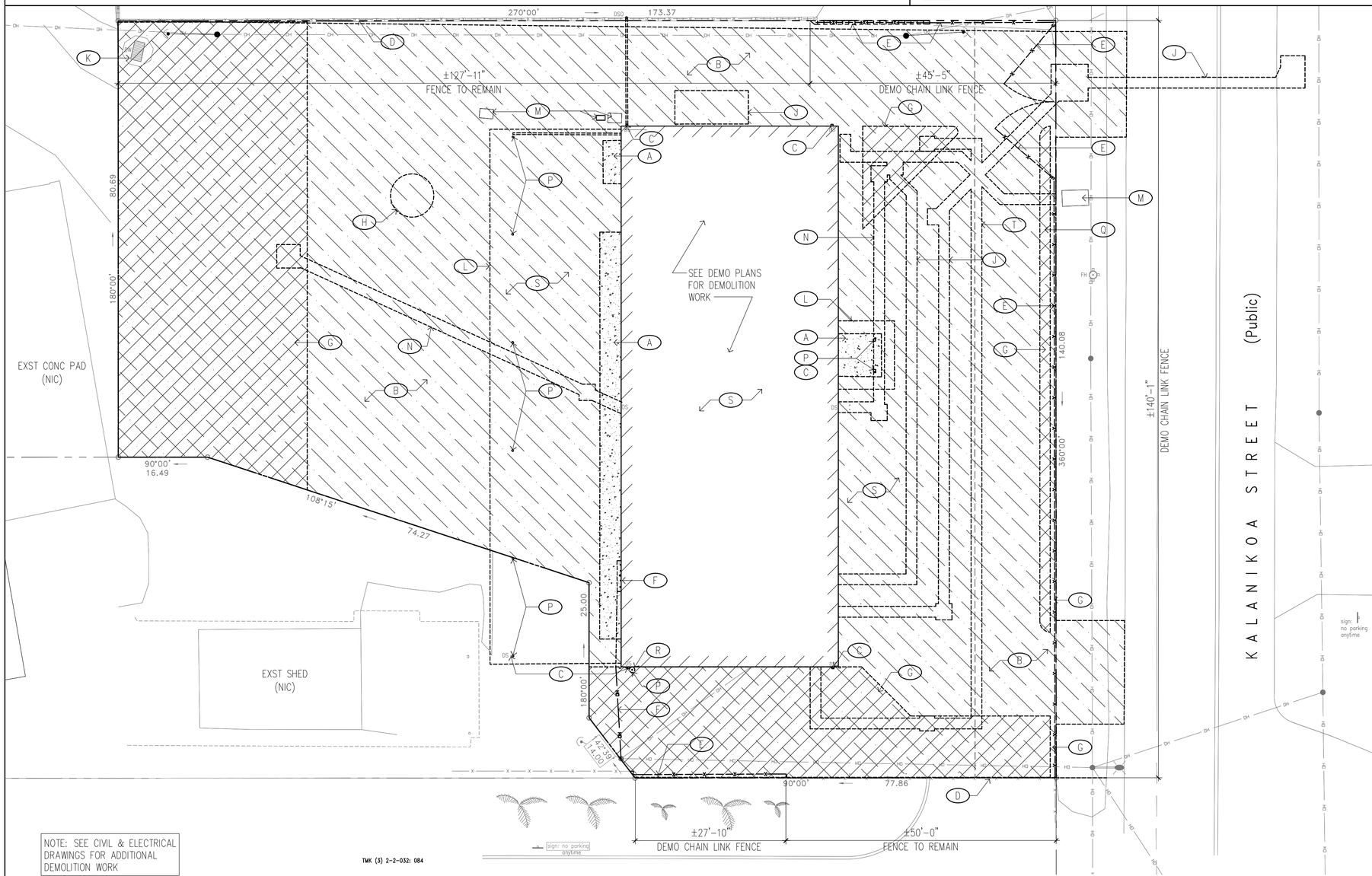

1 DEMOLITION SITE PLAN
SCALE: 3/32" = 1'-0"

0 4' 8' 12' 16' 20' 24' 28' 32'
SCALE: 3/32" = 1'-0"

NORTH WEST EAST SOUTH

REVISION NO.	SYM.	DESCRIPTION	SHT./OF	DATE	APPROVED

FRED K. ERSKINE LICENSED PROFESSIONAL ARCHITECT No. 10192 HAWAII, U.S.A.

THIS LICENSE EXPIRES APRIL 30, 2024

SIGNATURE

THIS WORK WAS PREPARED BY ME OR UNDER MY SUPERVISION AND CONSTRUCTION OF THIS PROJECT WILL BE UNDER MY OBSERVATION. (OBSERVATION OF CONSTRUCTION IS NOT REQUIRED UNDER THE RULES OF THE HAWAII ADMINISTRATIVE RULES, DEPARTMENT OF COMMERCE AND CONSUMER AFFAIRS ENTITLED PROFESSIONAL ENGINEERS, ARCHITECTS, SURVEYORS AND LANDSCAPE ARCHITECTS).

STATE OF HAWAII
DEPARTMENT OF LAND AND NATURAL RESOURCES
ENGINEERING DIVISION

HAWAII DISTRICT LAND OFFICE
HILO, HAWAI'I

DEMOLITION SITE PLAN

DESIGNED: KK	SUBMITTED:
DRAWN: KA, TW, WL	DATE: NOVEMBER 2022
CHECKED: FE	SCALE: AS NOTED
APPROVED:	Carty Chang E-signed 2022-11-28 04:17PM HST carty.s.chang@hawaii.gov State of Hawaii Civil Engineer
CHIEF ENGINEER	

DRAWING NO. A-100

DEMOLITION NOTES

1. SEE SHEET T-002 FOR ADDITIONAL NOTES & REQUIREMENTS.
2. PERFORM ALL DEMOLITION SO THAT EXISTING CONSTRUCTION TO REMAIN IS UNDAMAGED.
3. EXTENT OF REMOVAL AS INDICATED IS APPROXIMATE. CONTRACTOR SHALL VERIFY THE EXTENT OF REMOVAL WORK TO PROPERLY ACCOMMODATE THE METHOD OF REQUIRED NEW CONSTRUCTION. ADDITIONAL REMOVAL & PATCHING REQ'D TO ACCOMMODATE NEW CONSTRUCTION SHALL BE CONSIDERED INCIDENTAL TO THE NEW WORK CONTAINED HEREIN WITH NO ADDITIONAL COMPENSATION BEING PROVIDED.
4. PROPERLY PREPARE ALL SURFACES THAT ARE TO BE RE-PAINTED AS NEEDED TO MEET PRODUCT & MANUFACTURER'S REQUIREMENTS & RECOMMENDATIONS FOR A COMPLETE, SOUND & TIGHT JOB. ALLOW FOR CONSTRUCTION TOLERANCES IN ORDER TO MEET THE MINIMUM/MAXIMUM REQUIREMENTS AS SPECIFIED & INDICATED IN THE DRAWINGS & SPECIFICATIONS.
5. ALL DIMENSIONS SHOWN ARE APPROXIMATE & SHALL BE FIELD VERIFIED BY THE CONTRACTOR. SEE CIVIL, LANDSCAPE, STRUCTURAL, MECHANICAL & ELECTRICAL DRAWINGS FOR ADDITIONAL DEMOLITION REQUIREMENTS.
6. CONTRACTOR SHALL TONE ALL AREAS AFFECTED BY THE WORK PRIOR TO SAWCUTTING, TRENCHING, EXCAVATION, ETC. CONTRACTOR SHALL BE RESPONSIBLE FOR REPAIRING ANY DAMAGE THAT OCCURS TO ANY UTILITY/POWER/COMMUNICATIONS LINES & OTHER EXISTING INFRASTRUCTURE.
7. SEE HAZMAT REPORT AND SECTIONS IN SPECIFICATIONS FOR ABATEMENT WORK. CONTRACTOR IS RESPONSIBLE TO MEET THE REQUIREMENTS AS SPECIFIED & INDICATED IN THE DRAWINGS AND SPECIFICATIONS.
8. ACTUAL EXTENT OF GRADING, TRENCHING, & EXCAVATION IS NOT DEPICTED. THE CONTRACTOR SHALL DETERMINE THE ACTUAL EXTENT OF TRENCHING & EXCAVATION REQUIRED TO ACCOMMODATE THE INSTALLATION OF NEW ELEC., TELECOM, DRAIN LINES, WATER LINES, ETC. PRIOR TO BID SUBMITTAL. SEE CIVIL, MECHANICAL, AND ELECTRICAL DRAWINGS FOR ADDITIONAL INFORMATION.
9. EXTENT OF SAWCUTTING OF THE CONCRETE SLAB ON GRADE & EXCAVATION IS NOT DEPICTED. THE CONTRACTOR SHALL DETERMINE THAT ACTUAL EXTENT OF SAWCUTTING & EXCAVATION REQUIRED TO ACCOMMODATE THE WORK.
10. EXTENTS/LIMITS OF TRENCHING & EXCAVATION WORK IS NOT SHOWN. THE CONTRACTOR SHALL INCLUDE ALL COSTS FOR TRENCHING & EXCAVATION WORK TO RELOCATE BURIED INFRASTRUCTURE.
11. THE CONTRACTOR SHALL PROVIDE TEMPORARY BARRICADES AROUND WORK AREA DURING CONSTRUCTION.

LEGEND (THIS SHEET)

- INDICATES EXISTING TO REMAIN
- INDICATES EXISTING TO BE DEMOLISHED/REMOVED/ALTERED
- INDICATE AREA OF CONC TO BE SAW CUT
- DEMO & PREPARE FOR FLOOR LEVELING
- INDICATE AREA OF CONC TRENCH TO BE SAW CUT

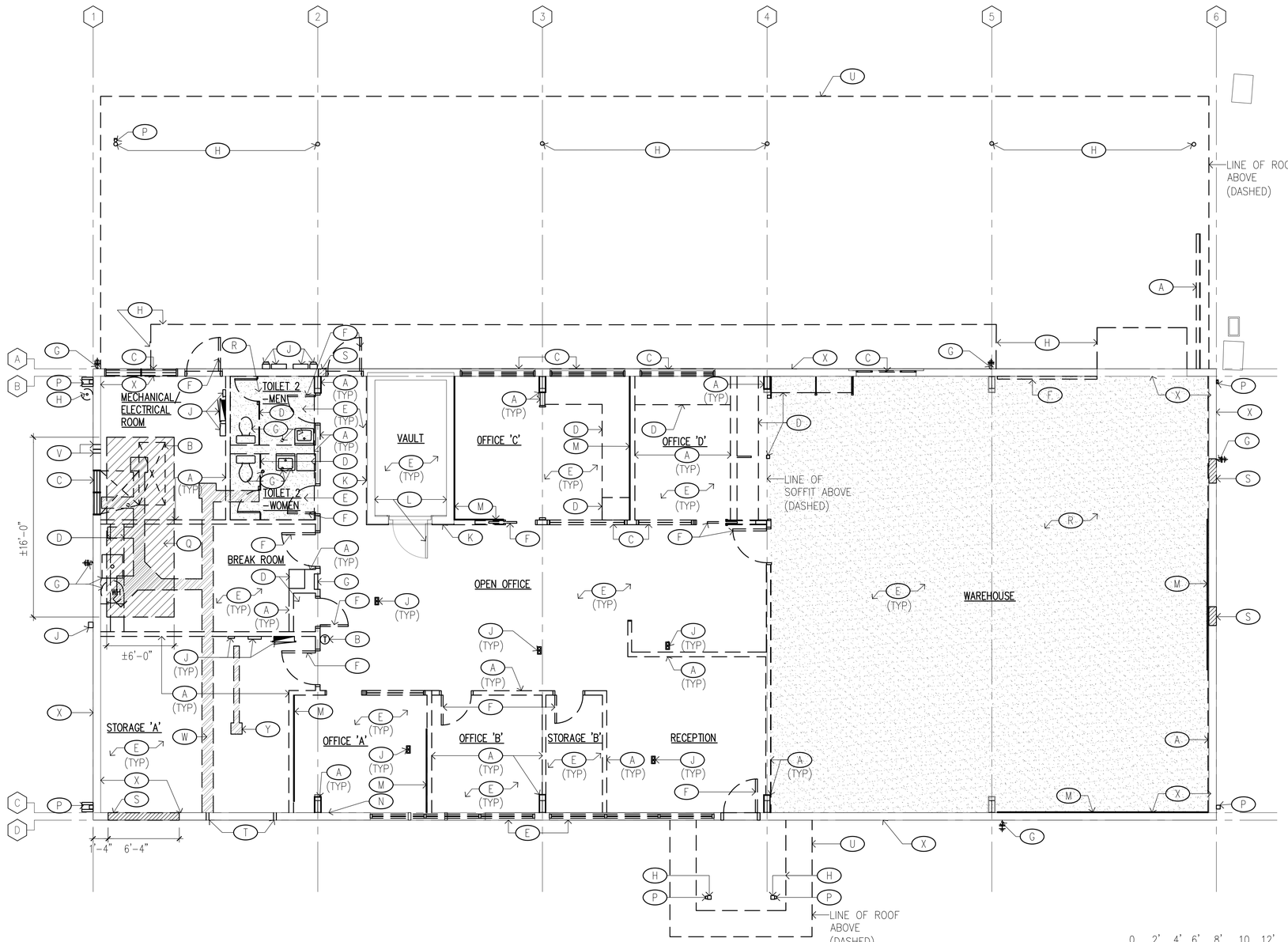

1 DEMOLITION FLOOR PLAN
SCALE: 3/16" = 1'-0"

0 2' 4' 6' 8' 10 12'
SCALE: 3/16" = 1'-0"

WEST SOUTH NORTH EAST

KEYNOTES (THIS SHEET)

KEYNOTE NO.	
A	DEMOLISH FULL HEIGHT INTERIOR PARTITIONS COMPLETE & GYP BD FURRING AROUND COLUMNS. PATCH/REPAIR ADJACENT FLOORS & WALLS TO REMAIN. GYP BD MAY CONTAIN FIBERGLASS, CONTRACTOR USE CAUTION DURING REMOVAL & HANDLING. GYP BD JOINT COMPOUND, TEXTURE, & PAINT MAY CONTAIN ASBESTOS & LEAD, ABATE PER HAZMAT REPORT IN SPECIFICATIONS.
B	DEMOLISH AIR CONDITIONING UNIT & CONNECTIONS. SEE MECHANICAL DRAWINGS. FOIL WRAP INSULATION & BLACK VIBRATION CLOTH MAY CONTAIN FIBERGLASS, CONTRACTOR USE CAUTION DURING REMOVAL & HANDLING. PAINT ON METAL PIPES MAY CONTAIN LEAD, ABATE PER HAZMAT REPORT IN SPECIFICATIONS.
C	REMOVE WINDOW/LOUVER SYSTEM COMPLETE & PREPARE OPENING FOR NEW WINDOW INSTALLATION. PAINT ON WINDOW FRAME MAY CONTAIN LEAD, ABATE PER HAZMAT REPORT IN SPECIFICATIONS.
D	DEMOLISH BUILT-IN CABINETRY/STORAGE, RESTROOM PARTITIONS, & RESTROOM ACCESSORIES IN ENTIRETY.
E	REMOVE FLOOR TILE & WALL BASE THROUGHOUT. LEVEL & PREP FLOOR SURFACE FOR NEW FLOOR FINISH PER MANUFACTURER'S INSTRUCTIONS. FLOOR TILE & MASTIC UNDER WALL BASE MAY CONTAIN ASBESTOS, ABATE PER HAZMAT REPORT IN SPECIFICATIONS.
F	DEMOLISH DOOR LEAF, DOOR HARDWARE, & DOOR FRAME COMPLETE. PAINT ON DOORS & DOOR FRAMES MAY CONTAIN LEAD, ABATE PER HAZMAT REPORT IN SPECIFICATIONS.
G	DEMOLISH ALL PLUMBING FIXTURES, WATER HEATER, HOSE BIB, & FLOOR DRAIN/CLEAN OUT. PATCH & REPAIR ADJACENT FLOORS & WALLS TO REMAIN. SINK INSULATION MAY CONTAIN ASBESTOS, ABATE PER HAZMAT REPORT IN SPECIFICATIONS. SEE MECH DRWG.
H	DEMOLISH CONCRETE SIDEWALK, PAD, RAMP, METAL POST, & FOOTING COMPLETE.
J	DISCONNECT & REMOVE ELECTRICAL PANELS, CONDUITS, RECEPTACLES, SWITCHES, & FIXTURES. PATCH & REPAIR ADJACENT FLOORS & WALLS TO REMAIN. LIGHT INSULATION MAY CONTAIN FIBERGLASS, CONTRACTOR USE CAUTION DURING REMOVAL & HANDLING. PAINT ON ELECTRICAL PANELS & DEVICES MAY CONTAIN LEAD, ABATE PER HAZMAT REPORT IN SPECIFICATIONS. SEE ELEC DRWG.
K	DEMOLISH WALL COVERING & ADHESIVE COMPLETE. PREPARE WALL SURFACE ON WALLS TO REMAIN FOR NEW FINISH.
L	VAULT WALLS & DOOR TO REMAIN.
M	DEMOLISH CORKBOARD/CHALKBOARD, & ADHESIVE COMPLETE. CORKBOARD & MASTIC MAY CONTAIN ARSENIC, ABATE PER HAZMAT REPORT IN SPECIFICATIONS.
N	PATCH & REPAIR PENETRATIONS & CRACKS IN PERIMETER WALL. SEE STRUCT DRWG & SPECIFICATIONS.
P	DEMOLISH DOWNSPOUT, INTERNAL GUTTER, & SPLASH BLOCK.
Q	CUT & DEMO PORTION OF CONC SLAB FOR NEW DEPRESSED SLAB. SEE STRUCT DRWG.
R	CONTRACTOR SHALL PREPARE FLOOR TO BE SEALED & LEVELED AS REQUIRED.
S	CUT & DEMO CMU WALL FOR NEW WINDOW/LOUVER OPENING. SEE STRUCT DRWG.
T	CORE CONC WALL FOOTING FOR PLUMBING POC. SEE CIVIL, MECH & STRUCT DRWG.
U	DEMOLISH CARPORT & ENTRY CANOPY COMPLETE.
V	CORE CONC WALL FOR REFRIGERANT PIPING. AT ±9'-0" AFF. APPROXIMATELY 5" ø FOR GAS LINE AND 4-1/2" ø FOR LIQUID LINE. SEE MECH & STRUCT DRWG.
W	SAWCUT, EXCAVATE, & TRENCH CONC SLAB FOR NEW PLUMBING. SEE MECH DRWG.
X	REMOVE PAINT FROM CMU WALL SURFACE. PREP SURFACE TO RECEIVE NEW SEALER (INTERIOR) AND NEW PAINT (EXTERIOR).
Y	SAWCUT, EXCAVATE, & TRENCH CONC SLAB FOR NEW FLOOR OUTLET. SEE ELEC DRWG.

REVISION NO.	SYM.	DESCRIPTION	SHT./OF	DATE	APPROVED

FRED K. ERSKINE LICENSED PROFESSIONAL ARCHITECT No. 10192 HAWAII, U.S.A.

THIS LICENSE EXPIRES APRIL 30, 2024

SIGNATURE

THIS WORK WAS PREPARED BY ME OR UNDER MY SUPERVISION AND CONSTRUCTION OF THIS PROJECT WILL BE UNDER MY OBSERVATION. (OBSERVATION OF CONSTRUCTION AS DEFINED IN CHAPTER 16-115 OF THE HAWAII ADMINISTRATIVE RULES, DEPARTMENT OF COMMERCE AND CONSUMER AFFAIRS ENTITLED PROFESSIONAL ENGINEERS, ARCHITECTS, SURVEYORS AND LANDSCAPE ARCHITECTS).

STATE OF HAWAII
DEPARTMENT OF LAND AND NATURAL RESOURCES
ENGINEERING DIVISION

HAWAII DISTRICT LAND OFFICE
HILO, HAWAI'I

DEMOLITION FLOOR PLAN

DESIGNED: KK	SUBMITTED:
DRAWN: KA, TW, WL	DATE: NOVEMBER 2022
CHECKED: FE	SCALE: AS NOTED
APPROVED:	Carty Chang E-signed 2022-11-28 04:17PM HST carty.s.chang@hawaii.gov State of Hawaii Chief Engineer
CHIEF ENGINEER	

DRAWING NO. A-101

DEMOLITION NOTES

1. SEE SHEET T-002 FOR ADDITIONAL NOTES & REQUIREMENTS.
2. PERFORM ALL DEMOLITION SO THAT EXISTING CONSTRUCTION TO REMAIN IS UNDAMAGED.
3. EXTENT OF REMOVAL AS INDICATED IS APPROXIMATE. CONTRACTOR SHALL VERIFY THE EXTENT OF REMOVAL WORK TO PROPERLY ACCOMMODATE THE METHOD OF REQUIRED NEW CONSTRUCTION. ADDITIONAL REMOVAL & PATCHING REQ'D TO ACCOMMODATE NEW CONSTRUCTION SHALL BE CONSIDERED INCIDENTAL TO THE NEW WORK CONTAINED HEREIN WITH NO ADDITIONAL COMPENSATION BEING PROVIDED.
4. PROPERLY PREPARE ALL SURFACES THAT ARE TO BE RE-PAINTED AS NEEDED TO MEET PRODUCT & MANUFACTURER'S REQUIREMENTS & RECOMMENDATIONS FOR A COMPLETE, SOUND & TIGHT JOB. ALLOW FOR CONSTRUCTION TOLERANCES IN ORDER TO MEET THE MINIMUM/MAXIMUM REQUIREMENTS AS SPECIFIED & INDICATED IN THE DRAWINGS & SPECIFICATIONS.
5. ALL DIMENSIONS SHOWN ARE APPROXIMATE & SHALL BE FIELD VERIFIED BY THE CONTRACTOR. SEE CIVIL, LANDSCAPE, STRUCTURAL, MECHANICAL & ELECTRICAL DRAWINGS FOR ADDITIONAL DEMOLITION REQUIREMENTS.
6. CONTRACTOR SHALL TONE ALL AREAS AFFECTED BY THE WORK PRIOR TO SAWCUTTING, TRENCHING, EXCAVATION, ETC. CONTRACTOR SHALL BE RESPONSIBLE FOR REPAIRING ANY DAMAGE THAT OCCURS TO ANY UTILITY/POWER/COMMUNICATIONS LINES & OTHER EXISTING INFRASTRUCTURE.
7. SEE HAZMAT REPORT AND SECTIONS IN SPECIFICATIONS FOR ABATEMENT WORK. CONTRACTOR IS RESPONSIBLE TO MEET THE REQUIREMENTS AS SPECIFIED & INDICATED IN THE DRAWINGS AND SPECIFICATIONS.
8. ACTUAL EXTENT OF GRADING, TRENCHING, & EXCAVATION IS NOT DEPICTED. THE CONTRACTOR SHALL DETERMINE THE ACTUAL EXTENT OF TRENCHING & EXCAVATION REQUIRED TO ACCOMMODATE THE INSTALLATION OF NEW ELEC., TELECOM, DRAIN LINES, WATER LINES, ETC. PRIOR TO BID SUBMITTAL. SEE CIVIL, MECHANICAL, AND ELECTRICAL DRAWINGS FOR ADDITIONAL INFORMATION.
9. EXTENT OF SAWCUTTING OF THE CONCRETE SLAB ON GRADE & EXCAVATION IS NOT DEPICTED. THE CONTRACTOR SHALL DETERMINE THAT ACTUAL EXTENT OF SAWCUTTING & EXCAVATION REQUIRED TO ACCOMMODATE THE WORK.
10. EXTENTS/LIMITS OF TRENCHING & EXCAVATION WORK IS NOT SHOWN. THE CONTRACTOR SHALL INCLUDE ALL COSTS FOR TRENCHING & EXCAVATION WORK TO RELOCATE BURIED INFRASTRUCTURE.
11. THE CONTRACTOR SHALL PROVIDE TEMPORARY BARRICADES AROUND WORK AREA DURING CONSTRUCTION.

LEGEND (THIS SHEET)

——— INDICATES EXISTING TO REMAIN

— — INDICATES EXISTING TO BE DEMOLISHED/REMOVED/ALTERED

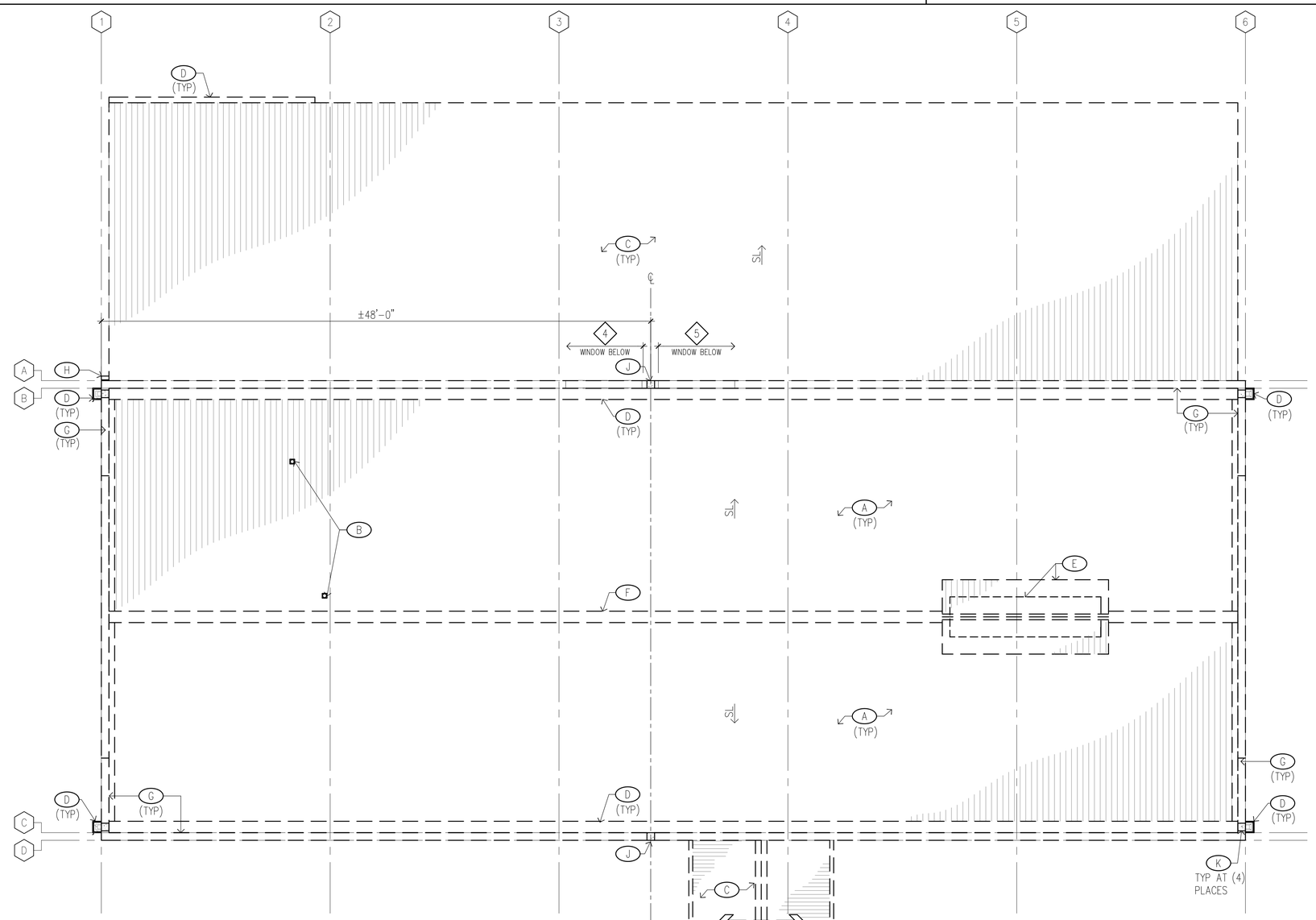

1 DEMOLITION ROOF PLAN

SCALE: 3/16" = 1'-0"

0 2' 4' 6' 8' 10 12'

SCALE: 3/16" = 1'-0"

WEST SOUTH NORTH EAST

KEYNOTES (THIS SHEET)

KEYNOTE NO.	
A	DEMOLISH CORRUGATED ROOF COMPLETE. STRUCT FRAMING BELOW TO REMAIN. SEE STRUCT DRWG.
B	DEMOLISH VTR, SEE MECH DRWG.
C	DEMOLISH CARPORT & ENTRY CANOPY COMPLETE. PATCH & REPAIR EXT WALL TO REMAIN.
D	DEMOLISH INTERNAL GUTTER, SCUPPER, FLASHING LEADER BOX, & DOWNSPOUT COMPLETE. PATCH & REPAIR ADJACENT STRUCTURE AND WALL TO REMAIN. PAINT MAY CONTAIN LEAD, ABATE PER HAZMAT REPORT IN SPECIFICATIONS.
E	DEMOLISH CLEARSTORY & WOOD FRAMING COMPLETE. PATCH & REPAIR STRUCTURE BELOW TO REMAIN.
F	DEMOLISH ROOF RIDGE COMPLETE. PATCH & REPAIR STRUCTURE BELOW TO REMAIN.
G	DEMOLISH PARAPET WALL CAP & FLASHING COMPLETE, PARAPET WALL TO REMAIN. FLASHING ON PARAPET WALL MAY CONTAIN ASBESTOS, ABATE PER HAZMAT REPORT IN SPECIFICATIONS.
H	DEMOLISH ELEC POC, SEE ELEC DRWG.
J	CUT PORTION OF CMU PARAPET WALL FOR NEW SCUPPER. COORDINATE WITH WINDOWS 4 & 5 BELOW ON GRIDLINE A.
K	CUT PORTION OF CMU PARAPET WALL FOR NEW SCUPPER.

REVISION NO.	SYM.	DESCRIPTION	SHT./OF	DATE	APPROVED

FRED K. ERSKINE LICENSED PROFESSIONAL ARCHITECT No. 10192 HAWAII, U.S.A.

THIS LICENSE EXPIRES APRIL 30, 2024

SIGNATURE

THIS WORK WAS PREPARED BY ME OR UNDER MY SUPERVISION AND CONSTRUCTION OF THIS PROJECT WILL BE UNDER MY OBSERVATION. (OBSERVATION OF CONSTRUCTION AS DEFINED IN CHAPTER 16-115 OF THE HAWAII ADMINISTRATIVE RULES, DEPARTMENT OF COMMERCE AND CONSUMER AFFAIRS, ENTITLED PROFESSIONAL ENGINEERS, ARCHITECTS, SURVEYORS AND LANDSCAPE ARCHITECTS).

STATE OF HAWAII
DEPARTMENT OF LAND AND NATURAL RESOURCES
ENGINEERING DIVISION

HAWAII DISTRICT LAND OFFICE
HILO, HAWAI'I

DEMOLITION ROOF PLAN

DESIGNED: KK	SUBMITTED:
DRAWN: KA, TW, WL	DATE: NOVEMBER 2022
CHECKED: FE	SCALE: AS NOTED
APPROVED:	Carty Chang E-signed 2022-11-28 04:17PM HST carty.s.chang@hawaii.gov State of Hawaii
CHIEF ENGINEER	Chief Engineer

DRAWING NO. A-102

DEMOLITION NOTES

1. SEE SHEET T-002 FOR ADDITIONAL NOTES & REQUIREMENTS.
2. PERFORM ALL DEMOLITION SO THAT EXISTING CONSTRUCTION TO REMAIN IS UNDAMAGED.
3. EXTENT OF REMOVAL AS INDICATED IS APPROXIMATE. CONTRACTOR SHALL VERIFY THE EXTENT OF REMOVAL WORK TO PROPERLY ACCOMMODATE THE METHOD OF REQUIRED NEW CONSTRUCTION. ADDITIONAL REMOVAL & PATCHING REQ'D TO ACCOMMODATE NEW CONSTRUCTION SHALL BE CONSIDERED INCIDENTAL TO THE NEW WORK CONTAINED HEREIN WITH NO ADDITIONAL COMPENSATION BEING PROVIDED.
4. PROPERLY PREPARE ALL SURFACES THAT ARE TO BE RE-PAINTED AS NEEDED TO MEET PRODUCT & MANUFACTURER'S REQUIREMENTS & RECOMMENDATIONS FOR A COMPLETE, SOUND & TIGHT JOB. ALLOW FOR CONSTRUCTION TOLERANCES IN ORDER TO MEET THE MINIMUM/MAXIMUM REQUIREMENTS AS SPECIFIED & INDICATED IN THE DRAWINGS & SPECIFICATIONS.
5. ALL DIMENSIONS SHOWN ARE APPROXIMATE & SHALL BE FIELD VERIFIED BY THE CONTRACTOR. SEE CIVIL, LANDSCAPE, STRUCTURAL, MECHANICAL & ELECTRICAL DRAWINGS FOR ADDITIONAL DEMOLITION REQUIREMENTS.
6. CONTRACTOR SHALL TONE ALL AREAS AFFECTED BY THE WORK PRIOR TO SAWCUTTING, TRENCHING, EXCAVATION, ETC. CONTRACTOR SHALL BE RESPONSIBLE FOR REPAIRING ANY DAMAGE THAT OCCURS TO ANY UTILITY/POWER/COMMUNICATIONS LINES & OTHER EXISTING INFRASTRUCTURE.
7. SEE HAZMAT REPORT AND SECTIONS IN SPECIFICATIONS FOR ABATEMENT WORK. CONTRACTOR IS RESPONSIBLE TO MEET THE REQUIREMENTS AS SPECIFIED & INDICATED IN THE DRAWINGS AND SPECIFICATIONS.
8. ACTUAL EXTENT OF GRADING, TRENCHING, & EXCAVATION IS NOT DEPICTED. THE CONTRACTOR SHALL DETERMINE THE ACTUAL EXTENT OF TRENCHING & EXCAVATION REQUIRED TO ACCOMMODATE THE INSTALLATION OF NEW ELEC., TELECOM, DRAIN LINES, WATER LINES, ETC. PRIOR TO BID SUBMITTAL. SEE CIVIL, MECHANICAL, AND ELECTRICAL DRAWINGS FOR ADDITIONAL INFORMATION.
9. EXTENT OF SAWCUTTING OF THE CONCRETE SLAB ON GRADE & EXCAVATION IS NOT DEPICTED. THE CONTRACTOR SHALL DETERMINE THAT ACTUAL EXTENT OF SAWCUTTING & EXCAVATION REQUIRED TO ACCOMMODATE THE WORK.
10. EXTENTS/LIMITS OF TRENCHING & EXCAVATION WORK IS NOT SHOWN. THE CONTRACTOR SHALL INCLUDE ALL COSTS FOR TRENCHING & EXCAVATION WORK TO RELOCATE BURIED INFRASTRUCTURE.
11. THE CONTRACTOR SHALL PROVIDE TEMPORARY BARRICADES AROUND WORK AREA DURING CONSTRUCTION.

LEGEND (THIS SHEET)

- INDICATES EXISTING TO REMAIN
- INDICATES EXISTING TO BE DEMOLISHED/REMOVED/ALTERED
- INDICATES CEILING FINISH TO REMAIN
- INDICATES PORTION OF CMU TO BE CUT & DEMOLISHED

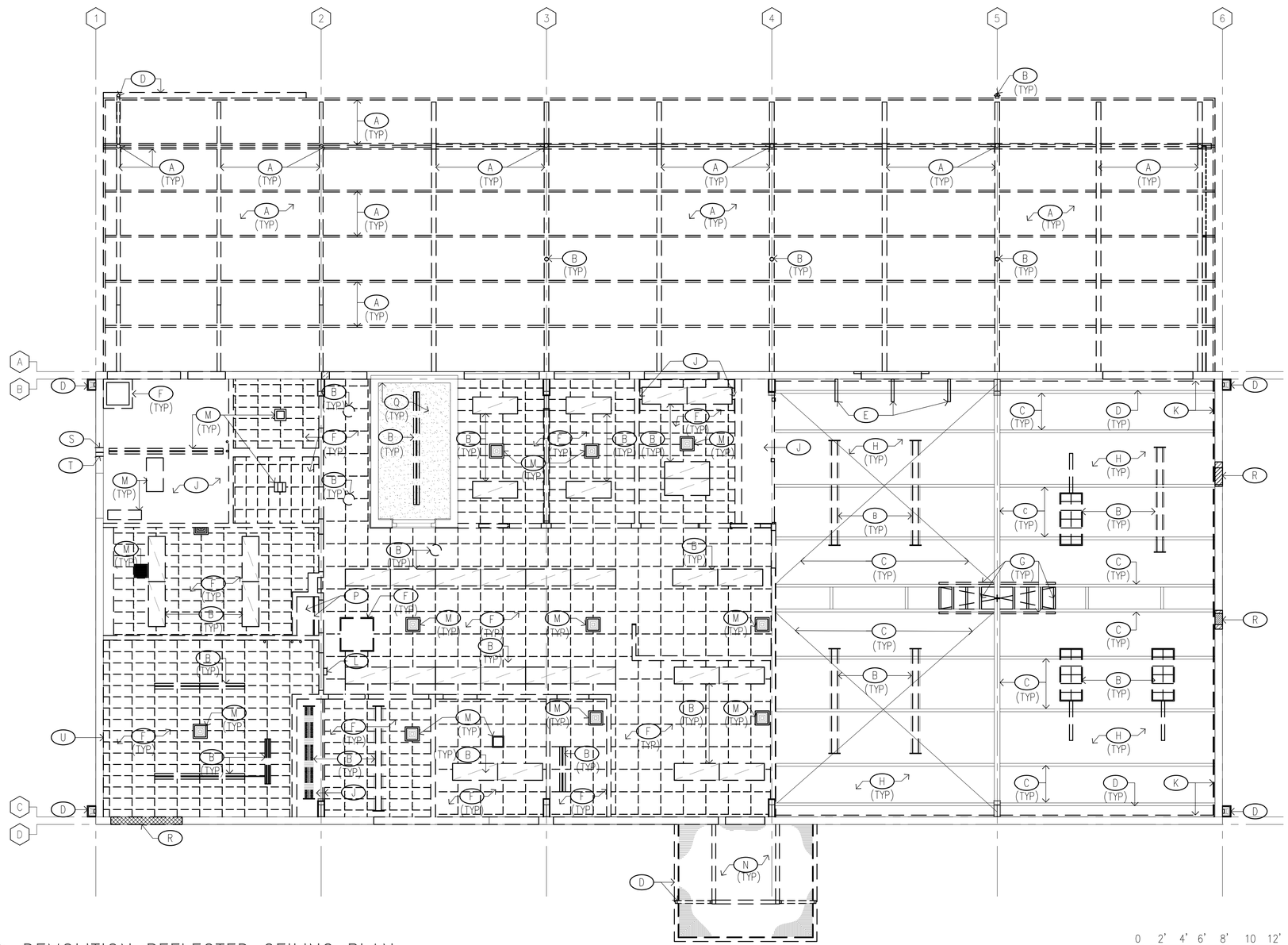

1 DEMOLITION REFLECTED CEILING PLAN
SCALE: 3/16" = 1'-0"

0 2' 4' 6' 8' 10 12'
SCALE: 3/16" = 1'-0"

WEST SOUTH NORTH EAST

KEYNOTE NO.	KEYNOTES (THIS SHEET)
A	DEMOLISH CARPORT CORRUGATED ROOF, STRUCT FRAMING, AND WOOD PURLINS COMPLETE. PATCH & REPAIR ADJACENT EXTERNAL WALL TO REMAIN. PAINT ON FRAMING & PURLINS MAY CONTAIN LEAD, ABATE PER HAZMAT REPORT IN SPECIFICATIONS.
B	DEMOLISH LIGHT FIXTURE & ASSOCIATED CONDUITS. PATCH & REPAIR SURFACES OF STRUCTURAL FRAMING & CEILING TO REMAIN. LIGHT INSULATION MAY CONTAIN FIBERGLASS, CONTRACTOR USE CAUTION DURING REMOVAL & HANDLING. LIGHT FIXTURE MAY CONTAIN MERCURY, ABATE PER HAZMAT REPORT IN SPECIFICATIONS. SEE ELEC DRWG.
C	REMOVE PAINT & RUST ON ALL STRUCT FRAMING TO REMAIN. PATCH & REPAIR RUSTED AREAS. PREPARE SURFACE TO RECEIVE NEW PAINT. PAINT ON STRUCT FRAMING MAY CONTAIN LEAD, ABATE PER HAZMAT REPORT IN SPECIFICATIONS. SEE STRUCT DRWG.
D	DEMOLISH INTERNAL GUTTER, DOWNSPOUT, & LEADER BOX COMPLETE. PAINT ON GUTTER, DOWNSPOUT, & LEADER BOX MAY CONTAIN LEAD, ABATE PER HAZMAT REPORT IN SPECIFICATIONS.
E	DEMOLISH WALL RACK. PATCH & REPAIR ADJACENT WALL TO REMAIN.
F	DEMOLISH CEILING TILE, ACCESS PANELS/OPENINGS, & SUPPORT. CEILING TILE MAY CONTAIN ASBESTOS, ABATE PER HAZMAT REPORT IN SPECIFICATIONS.
G	DEMOLISH WOOD FRAMING AT CLEARSTORY. PATCH & REPAIR STRUCT FRAMING TO REMAIN. REINFORCE STRUCT FRAMING, AS REQUIRED. SEE STRUCT DRWG.
H	DEMOLISH CORRUGATED ROOF THROUGHOUT. ROOF/BUILDING STRUCTURE TO REMAIN.
J	DEMOLISH CEILING SOFFIT & TRIM. PATCH & REPAIR ADJACENT STRUCTURE & WALL TO REMAIN. GYP BD MAY CONTAIN FIBERGLASS, CONTRACTOR USE CAUTION DURING REMOVAL & HANDLING. GYP BD JOINT COMPOUND, TEXTURE, & PAINT MAY CONTAIN ASBESTOS & LEAD, ABATE PER HAZMAT REPORT IN SPECIFICATIONS.
K	DEMOLISH 2X AROUND PERIMETER OF WAREHOUSE.
L	DEMOLISH DOOR BELL SPEAKER. SEE ELEC DRWG.
M	DEMOLISH CEILING MOUNTED REGISTERS/DEVICES, & DUCT/CONDUIT CONNECTIONS ABOVE THE CEILING. SEE MECH & ELEC DRWG.
N	DEMOLISH ENTRY CANOPY & SUPPORT COMPLETE. PATCH & REPAIR ADJACENT WALL TO REMAIN. PAINT MAY CONTAIN LEAD, ABATE PER HAZMAT REPORT IN SPECIFICATIONS.
P	DEMOLISH SHELVING & CLOSET ROD.
Q	VAULT CEILING & WALLS TO REMAIN.
R	CUT & DEMO CMU WALL FOR WINDOW/LOUVER OPENING. SEE STRUCT DWRG.
S	CORE 5" DIAMETER PENETRATION FOR REFRIGERANT GAS LINE AT ±9'-0" CEILING HEIGHT. SEE MECH DRWG.
T	CORE 4-1/2" DIAMETER PENETRATION FOR REFRIGERANT LIQUID LINE ±9'-0" CEILING HEIGHT. SEE MECH DRWG.
U	DEMOLISH CORRODED ANGLE LEDGER NOTIFY THE STATE & ARCHITECT OF SEVERELY CORRODED STRUCTURAL MEMBERS ABOVE THE CEILING TILE. SEE STRUCT DRWG.

REVISION NO.	SYM.	DESCRIPTION	SHT./OF	DATE	APPROVED

FRED K. ERSKINE
LICENSED PROFESSIONAL ARCHITECT
No. 10192
HAWAII, U.S.A.

THIS LICENSE EXPIRES APRIL 30, 2024

SIGNATURE

THIS WORK WAS PREPARED BY ME OR UNDER MY SUPERVISION AND CONSTRUCTION OF THIS PROJECT WILL BE UNDER MY OBSERVATION. (OBSERVATION OF CONSTRUCTION AS DEFINED IN CHAPTER 16-115 OF THE RULES OADMINISTRATIVE RULES OF THE DEPT. OF COMMERCE AND CONSUMER AFFAIRS ENTITLED PROFESSIONAL ENGINEERS, ARCHITECTS, SURVEYORS AND LANDSCAPE ARCHITECTS).

STATE OF HAWAII
DEPARTMENT OF LAND AND NATURAL RESOURCES
ENGINEERING DIVISION

HAWAII DISTRICT LAND OFFICE
HILO, HAWAI'I

DEMOLITION REFLECTED CEILING PLAN

DESIGNED: KK	SUBMITTED:
DRAWN: KA, TW, WL	DATE: NOVEMBER 2022
CHECKED: FE	SCALE: AS NOTED
APPROVED:	
CHIEF ENGINEER	

Carty Chang
E-signed 2022-11-28 04:17PM HST
carty.s.chang@hawaii.gov
State of Hawaii
Chief Engineer

DRAWING NO. A-103

GENERAL NOTES

1. ALL WORK SHOWN IS NEW UNLESS OTHERWISE NOTED.
2. SEE SHEET T-002 FOR ADDITIONAL NOTES AND REQUIREMENTS.
3. SEE CIVIL, LANDSCAPE, MECHANICAL, STRUCTURAL & ELECTRICAL DRAWINGS FOR ADDITIONAL REQUIREMENTS.
4. CONCRETE/ASPHALT PAVED WALKWAYS SHALL NOT EXCEED THE FOLLOWING SLOPES:
   - IN DIRECTION OF TRAVEL 1:20, UNLESS OTHERWISE NOTED.
   - CROSS SLOPE OF 1:50.
5. ALL NON-PAVED AREAS DAMAGED AS A RESULT OF NEW WORK SHALL BE RE-PLANTED W/GRASS TO MATCH EXST. ADJ. GRASS AREAS.
6. CONTRACTOR SHALL TONE FOR UTILITY LINES IN ALL AREAS OF THE SITE THAT WILL BE AFFECTED BY THE WORK.
7. ALL DIMENSIONS ARE TAKEN FROM THE FACE OF FIN. UNLESS OTHERWISE NOTED.
8. CONTRACTOR SHALL PAINT ALL UNFINISHED SURFACES, UNLESS OTHERWISE NOTED.
9. CONTRACTOR SHALL FIELD VERIFY THE LOCATION AND CONFIRM DIMENSIONS OF SHOP DRAWINGS PRIOR TO APPROVAL AND ORDERING OF HDS SYSTEM. CONTRACTOR SHALL PROVIDE ALL COMPONENTS TO SUPPORT THE HDS SYSTEM, INCLUDING (BUT NOT LIMITED TO) ANCHORS, BOLTS, RAILS, GROUT, POWER SUPPLY, J-BOXES, STRUCTURAL SUPPORT, ETC. CONTRACTOR IS RESPONSIBLE FOR THE PREPARATION, ASSEMBLY, CONNECTIONS, AND COMPLETE INSTALLATION OF THE HDS SYSTEM AT NO ADDITIONAL COST TO THE STATE.

LEGEND (THIS SHEET)

X	DOOR TYPE, SEE A-601	CO	CLEAN OUT
X	WINDOW TYPE, SEE A-601		FLOOR DRAIN
X	SIGN TYPE		FLOOR POWER & DATA OUTLET
XX	PARTITION TYPE, SEE A-403	DS	DOWNSPOUT
	CONCRETE MASONRY UNIT INFILL	DS	DOWNSPOUT W/SPLASH BLOCK
	FULL HEIGHT PARTITION, PAINT AS SPECIFIED	HB	HOSE BIB
	PARTIAL HEIGHT PARTITION, PAINT AS SPECIFIED		SITE SINAGE
	PARTIAL HEIGHT PARTITION, PAINT AS SPECIFIED, W/WOOD CAP		ADA SIGNAGE
	1-HR RATED PARTITION		LAMP POST

KEYNOTES (THIS SHEET)

KEYNOTE NO.	
1	INFILL OPENING WITH CMU. MATCH EXST PATTERN & BLOCK SIZE.
2	DOWNSPOUT DRAIN PIPE TO LANDSCAPED AREAS. SEE CIVIL DRWG.
3	ADDITIVE BID NO. 3. AREA FOR ELECTRONIC HIGH DENSITY STORAGE SYSTEM, CFCI. SEE ELEC DRWG & SPECIFICATION.
4	LEVEL & SEAL EXST CONC FLR.
5	BASE & WALL HUNG CABINETS.
6	OPEN SHELVING.
7	METAL AWNING W/ GUTTER AND DOWNSPOUT ABOVE. CONNECT TO DOWNSPOUT DRAINPIPE.
8	HELCO METER & MAIN DISCONNECT SWITCH. SEE ELEC DRWG.
9	ADDITIVE BID NO. 3 – PV DISCONNECT SWITCH.
10	DOWNSPOUT W/ PRE-CAST CONC SPLASH BLOCK.
11	SITE SIGNAGE, SEE CIVIL DRWG.
12	FULL HEIGHT STORAGE. SEE DETAIL 4/A-703.
13	APPLY SEALER TO CMU WALL AS SCHEDULED.
14	PAINT WALLS AS SCHEDULED.
15	PARTIAL HT WALL SUPPORT.
16	DOWNSPOUT OVERFLOW STRUCTURE.
17	CONC CURB, SEE CIVIL DRWG.
18	PARKING MARKING, SEE CIVIL DRWG.
19	PRE-CAST CONC WHEEL STOP, TYP.
20	VALVE BOX, SEE CIVIL DRWG.
21	BACKFLOW PREVENTER, SEE CIVIL DRWG.
22	CHAIN LINK FENCE AND GATE.
23	GATE OPERATOR.
24	CORE CMU WALL FOR HOSE BIBB WATER LINE. PATCH AND REPAIR WALL. SEAL AROUND PENETRATION

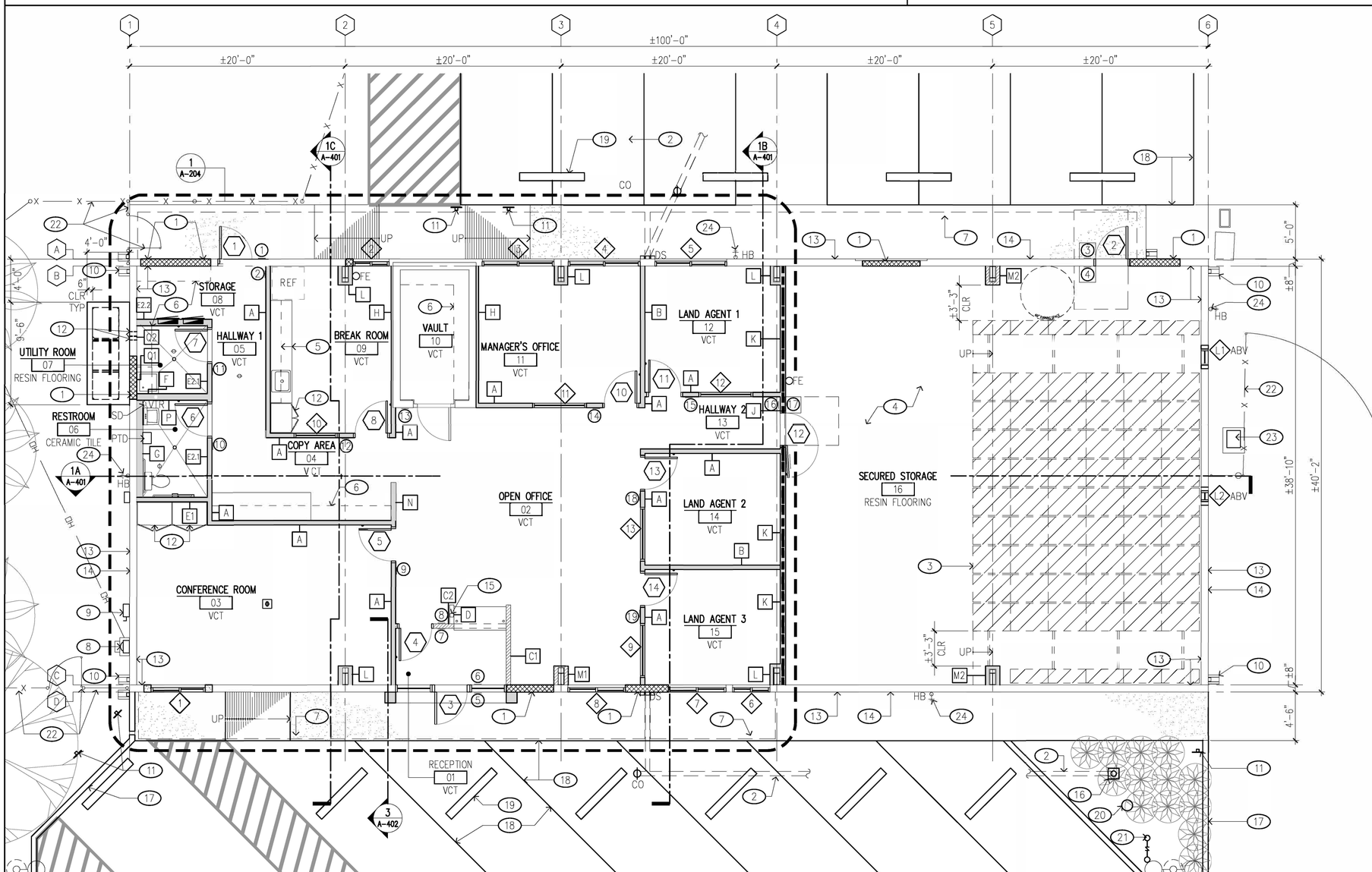

1 REPAIR FLOOR PLAN
SCALE: 3/16" = 1'-0"

KEY TO INTER. ELEV.

SCALE: 3/16" = 1'-0"

REVISION NO.	SYM.	DESCRIPTION	SHT./OF	DATE	APPROVED

FRED K. ERSKINE LICENSED PROFESSIONAL ARCHITECT No. 10192 HAWAII, U.S.A.

THIS LICENSE EXPIRES APRIL 30, 2024

SIGNATURE

THIS WORK WAS PREPARED BY ME, OR UNDER MY SUPERVISION AND CONSTRUCTION OF THIS PROJECT WILL BE SUPERVISED BY A LICENSED ARCHITECT OR CONSTRUCTION AS DEFINED IN CHAPTER 16-115 OF THE HAWAII ADMINISTRATIVE RULES, DEPARTMENT OF COMMERCE AND CONSUMER AFFAIRS ENTITLED PROFESSIONAL ENGINEERS, ARCHITECTS, SURVEYORS AND LANDSCAPE ARCHITECTS).

STATE OF HAWAII
DEPARTMENT OF LAND AND NATURAL RESOURCES
ENGINEERING DIVISION

HAWAII DISTRICT LAND OFFICE
HILO, HAWAI'I

REPAIR FLOOR PLAN

DESIGNED: KK	SUBMITTED:
DRAWN: KA, TW, WL	DATE: NOVEMBER 2022
CHECKED: FE	SCALE: AS NOTED
APPROVED: Carty Chang E-signed 2022-11-28 04:17PM HST carty.s.chang@hawaii.gov State of Hawaii Chief Engineer	DRAWING NO. A-201
CHIEF ENGINEER	

GENERAL NOTES

1. ALL WORK SHOWN IS NEW UNLESS OTHERWISE NOTED.
2. SEE SHEET T-002 FOR ADDITIONAL NOTES AND REQUIREMENTS.
3. SEE CIVIL, LANDSCAPE, MECHANICAL, STRUCTURAL & ELECTRICAL DRAWINGS FOR ADDITIONAL REQUIREMENTS.
4. CONCRETE/ASPHALT PAVED WALKWAYS SHALL NOT EXCEED THE FOLLOWING SLOPES:
   - IN DIRECTION OF TRAVEL 1:20, UNLESS OTHERWISE NOTED.
   - CROSS SLOPE OF 1:50.
5. ALL NON-PAVED AREAS DAMAGED AS A RESULT OF NEW WORK SHALL BE RE-PLANTED W/GRASS TO MATCH EXST. ADJ. GRASS AREAS.
6. CONTRACTOR SHALL TONE FOR UTILITY LINES IN ALL AREAS OF THE SITE THAT WILL BE AFFECTED BY THE WORK.
7. ALL DIMENSIONS ARE TAKEN FROM THE FACE OF FIN. UNLESS OTHERWISE NOTED.
8. CONTRACTOR SHALL PAINT ALL UNFINISHED SURFACES, UNLESS OTHERWISE NOTED.

LEGEND (THIS SHEET)

- TUBULAR DAYLIGHTNG DEVICE W/ CRICKET
- GOOSENECK EXHAUST W/ CRICKET
- VENT-THRU-ROOF (VTR)
- DS LEADERBOX & DOWNSPOUT
- WALKING PAD

KEYNOTES (THIS SHEET)

KEYNOTE NO.	
1	FLASH CMU WALL SCUPPER.
2	ROOF RIDGE.
3	MET COPING FLASHING CAP ON CMU PARAPET WALL
4	CRICKET
5	GOOSENECK EXHAUST. SEE MECH DRWG.
6	TPO ROOFING ON COVERBOARD & RIGID INSULATION W/ METAL DECK. SEE STRUCT DRWG. SEE IECC 2015 NOTE FOR MORE INFORMATION.
7	VTR, SEE MECH DRWG.
8	METAL AWNING BELOW WITH INTERNAL SLOPE GUTTER.
9	LEADERBOX & DOWNSPOUT.
10	WALKING PAD.
11	TUBULAR DAYLIGHTING DEVICE W/ DIMMER SWITCH AND THERMAL INSULATING PANEL. SEE IECC 2015 NOTE FOR MORE INFORMATION.

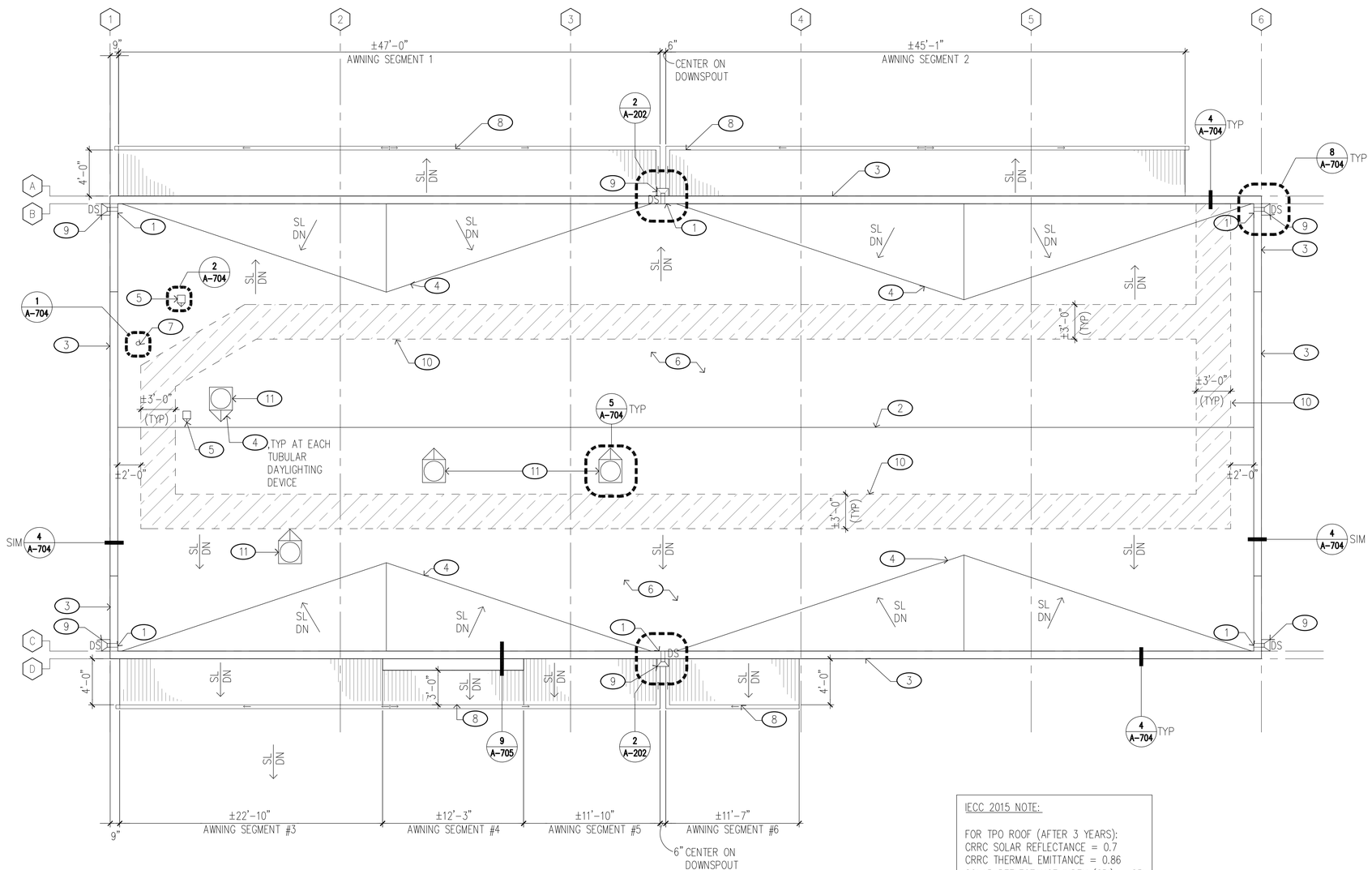

1 REPAIR ROOF PLAN
SCALE: 3/16" = 1'-0"

IECC 2015 NOTE:

FOR TPO ROOF (AFTER 3 YEARS):
CRRC SOLAR REFLECTANCE = 0.7
CRRC THERMAL EMITTANCE = 0.86
SOLAR REFLECTANCE INDEX (SRI) = 85

FOR SKYLIGHT:
U-FACTOR = 0.38
SHGC = 0.36

0 2' 4' 6' 8' 10 12'
SCALE: 3/16" = 1'-0"

WEST SOUTH NORTH EAST

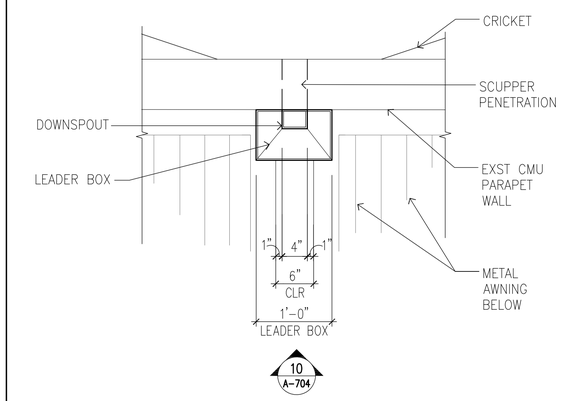

2 SCUPPER/LEADER BOX PLAN DETAIL
SCALE: 1" = 1'-0"

REVISION NO.	SYM.	DESCRIPTION	SHT./OF	DATE	APPROVED

LICENSED PROFESSIONAL ARCHITECT No. 10192 FRED K. ERSKINE HAWAII, U.S.A.

THIS LICENSE EXPIRES APRIL 30, 2024

SIGNATURE

THIS WORK WAS PREPARED BY ME, OR UNDER MY SUPERVISION AND CONSTRUCTION OF THIS PROJECT WILL BE UNDER MY OBSERVATION. (OBSERVATION OF CONSTRUCTION AS DEFINED IN CHAPTER 16-115 OF THE HAWAII ADMINISTRATIVE RULES, DEPARTMENT OF COMMERCE AND CONSUMER AFFAIRS, REGULATED PROFESSIONAL ENGINEERS, ARCHITECTS, SURVEYORS AND LANDSCAPE ARCHITECTS).

STATE OF HAWAII
DEPARTMENT OF LAND AND NATURAL RESOURCES
ENGINEERING DIVISION

HAWAII DISTRICT LAND OFFICE
HILO, HAWAI'I

REPAIR ROOF PLAN

DESIGNED: KK	SUBMITTED:
DRAWN: KA, TW, WL	DATE: NOVEMBER 2022
CHECKED: FE	SCALE: AS NOTED
APPROVED:	Carty Chang E-signed 2022-11-28 04:17PM HST carty.s.chang@hawaii.gov State of Hawaii
CHIEF ENGINEER	Chief Engineer

DRAWING NO. A-202

GENERAL NOTES

1. ALL WORK SHOWN IS NEW UNLESS OTHERWISE NOTED.
2. SEE SHEET T-002 FOR ADDITIONAL NOTES AND REQUIREMENTS.
3. SEE CIVIL, LANDSCAPE, MECHANICAL, STRUCTURAL & ELECTRICAL DRAWINGS FOR ADDITIONAL REQUIREMENTS.
4. CONCRETE/ASPHALT PAVED WALKWAYS SHALL NOT EXCEED THE FOLLOWING SLOPES:
   - IN DIRECTION OF TRAVEL 1:20, UNLESS OTHERWISE NOTED.
   - CROSS SLOPE OF 1:50.
5. ALL NON-PAVED AREAS DAMAGED AS A RESULT OF NEW WORK SHALL BE RE-PLANTED W/GRASS TO MATCH EXST. ADJ. GRASS AREAS.
6. CONTRACTOR SHALL TONE FOR UTILITY LINES IN ALL AREAS OF THE SITE THAT WILL BE AFFECTED BY THE WORK.
7. ALL DIMENSIONS ARE TAKEN FROM THE FACE OF FINISH UNLESS OTHERWISE NOTED.
8. CONTRACTOR SHALL PAINT ALL UNFINISHED SURFACES, UNLESS OTHERWISE NOTED.

LEGEND (THIS SHEET)

- SUSPENDED LIGHT FIXTURE
- CEILING MOUNTED LIGHT FIXTURE
- UNDER CABINET
- LAY-IN LIGHT FIXTURE
- EXTERIOR GRADE WALL SCONCE
- EXIT LIGHT, WALL MOUNTED
- EXIT LIGHT, CEILING MOUNTED W/DIRECTIONAL ARROWS
- SD SMOKE DETECTOR
- TUBULAR DAYLIGHTING DEVICE W/ DIMMABLE SWITCH
- EXHAUST FAN
- SUPPLY AIR DIFFUSER
- RETURN AIR REGISTER
- SUSPENDED ACOUSTICAL CEILING TILE
- GYP BD CEILING
- FAN COIL UNIT ABOVE CEILING
- FULL HEIGHT PARTITION
- PARTIAL HEIGHT PARTITION
- RECESSED LIGHT FIXTURE
- EMERGENCY LIGHT
- 1-HR RATED PARTITION

KEYNOTES (THIS SHEET)

KEYNOTE NO.	
1	OUTSIDE AIR INTAKE LOUVER. SEE STRUCT & MECH DRWG.
2	METAL AWNING W/ GUTTER.
3	SUSPENDED FAN COIL UNIT AND DUCT, TYP. SEE MECH DRWG.
4	PAINT EXST STRUCTURAL FRAMING AS SCHEDULED, TYP.
5	FIRE DAMPER. SEE MECH & ELEC DRWG.
6	WALL MOUNTED REGISTER. SEE MECH DRWG.
7	BENT PLATE, SEE STRUCT DRWG.
8	REPLACE CORRODED ANGLE LEDGER. SEE STRUCT DRWG.
9	MET ROOF DECKING NO PAINT.
10	PARTIAL HEIGHT PARTITION BELOW.

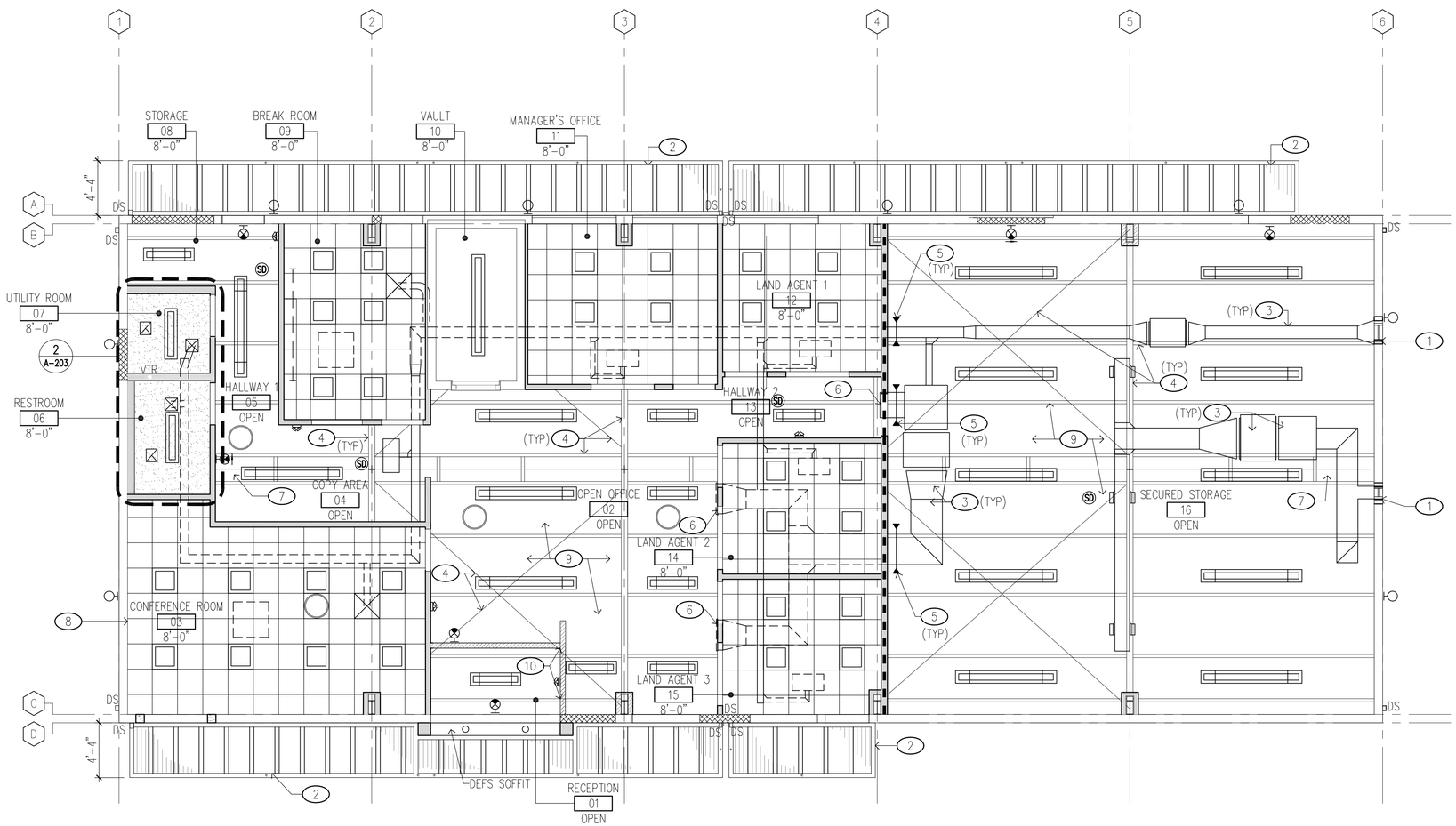

1 REPAIR REFLECTED CEILING PLAN
SCALE: 3/16" = 1'-0"

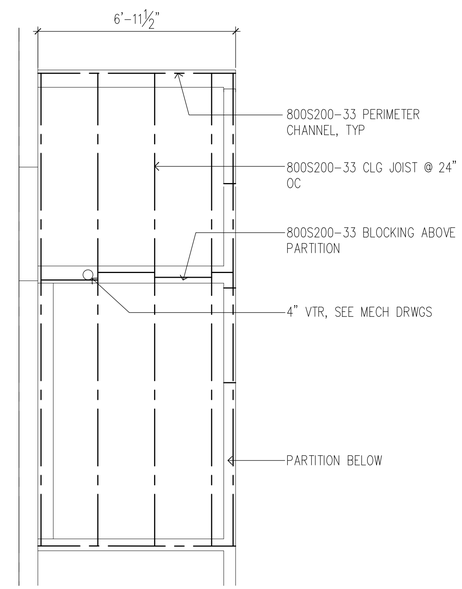

2 CEILING FRAMING PLAN
SCALE: 3/8" = 1'-0"

0 2' 4' 6'
SCALE: 3/8" = 1'-0"

REVISION NO.	SYM.	DESCRIPTION	SHT./OF	DATE	APPROVED

KEY TO INTER. ELEV. A B C D

0 2' 4' 6' 8' 10 12'
SCALE: 3/16" = 1'-0"

WEST SOUTH NORTH EAST

FRED K. ERSKINE LICENSED PROFESSIONAL ARCHITECT No. 10192 HAWAII, U.S.A.

THIS LICENSE EXPIRES APRIL 30, 2024

SIGNATURE

THIS WORK WAS PREPARED BY ME, OR UNDER MY SUPERVISION AND CONSTRUCTION OF THIS PROJECT WILL BE UNDER MY OBSERVATION. (OBSERVATION OF CONSTRUCTION AS DEFINED IN CHAPTER 16-115 OF THE HAWAII ADMINISTRATIVE RULES, DEPARTMENT OF COMMERCE AND CONSUMER AFFAIRS, LICENSED PROFESSIONAL ENGINEERS, ARCHITECTS, SURVEYORS AND LANDSCAPE ARCHITECTS).

STATE OF HAWAII
DEPARTMENT OF LAND AND NATURAL RESOURCES
ENGINEERING DIVISION

HAWAII DISTRICT LAND OFFICE
HILO, HAWAI'I

REPAIR REFLECTED CEILING PLAN

DESIGNED: KK	SUBMITTED:
DRAWN: KA, TW, WL	DATE: NOVEMBER 2022
CHECKED: FE	SCALE: AS NOTED
APPROVED:	Carty Chang E-signed 2022-11-28 04:17PM HST carty.s.chang@hawaii.gov State of Hawaii Chief Engineer
CHIEF ENGINEER	

DRAWING NO. A-203

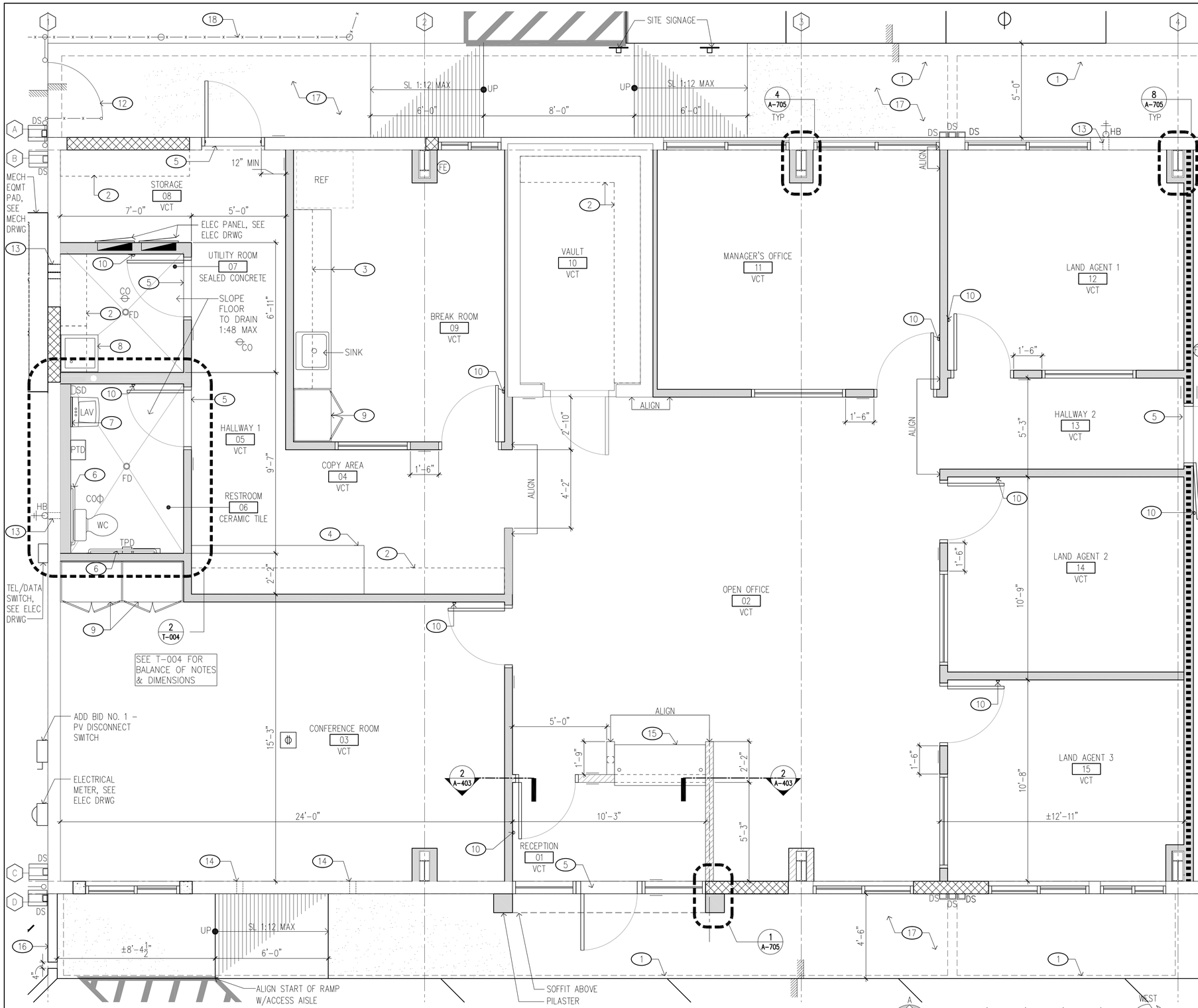

1 PARTIAL REPAIR FLOOR PLAN
SCALE: 3/8" = 1'-0"

GENERAL NOTES

1. ALL WORK SHOWN IS NEW UNLESS OTHERWISE NOTED.
2. SEE SHEET T-002 FOR ADDITIONAL NOTES AND REQUIREMENTS.
3. SEE MECHANICAL, STRUCTURAL & ELECTRICAL DRAWINGS FOR ADDITIONAL REQUIREMENTS.
4. CONCRETE/ASPHALT PAVED WALKWAYS SHALL NOT EXCEED THE FOLLOWING SLOPES:
   -IN DIRECTION OF TRAVEL 1:20, UNLESS OTHERWISE NOTED.
   -CROSS SLOPE OF 1:50.
5. ALL NON-PAVED AREAS DAMAGED AS A RESULT OF NEW WORK SHALL BE RE-PLANTED W/GRASS TO MATCH EXST. ADJ. GRASS AREAS.
6. CONTRACTOR SHALL TONE FOR UTILITY LINES IN ALL AREAS OF THE SITE THAT WILL BE AFFECTED BY THE WORK.
7. ALL DIMENSIONS ARE TAKEN FROM THE FACE OF FIN. UNLESS OTHERWISE NOTED.
8. CONTRACTOR SHALL PAINT ALL UNFINISHED SURFACES, UNLESS OTHERWISE NOTED.

LEGEND (THIS SHEET)

- FE — FIRE EXTINGUISHER
- FULL HEIGHT PTN
- 7'-1" HEIGHT PTN
- 4'-0" HEIGHT PTN
- CONCRETE MASONRY
- FLOOR POWER & DATA OUTLET
- 1-HR RATED PARTITION

KEYNOTES (THIS SHEET)

KEYNOTE NO.	
1	METAL AWNING ABOVE.
2	OPEN SHELVING.
3	BASE & WALL HUNG CASEWORK.
4	COUNTERTOP W/ CUBBY STORAGE BELOW
5	THRESHOLD.
6	GRAB BAR.
7	MIRROR.
8	MOP SINK.
9	FULL HEIGHT CASEWORK.
10	WALL STOP, TYP.
11	NOT USED.
12	CHAINLINK GATE FOR MAINTENANCE.
13	SEAL AROUND WALL PENETRATIONS.
14	PATCH & REPAIR AROUND FOOTING PENETRATIONS, SEE STRUCT DRWG.
15	TRANSACTION COUNTER.
16	CONC CURB.
17	CONC WALKWAY.
18	CHAIN LINK FENCE.

REVISION NO.	SYM.	DESCRIPTION	SHT./OF	DATE	APPROVED

FRED K. ERSKINE — LICENSED PROFESSIONAL ARCHITECT No. 10192 — HAWAII, U.S.A.

THIS LICENSE EXPIRES APRIL 30, 2024

SIGNATURE

THIS WORK WAS PREPARED BY ME OR UNDER MY SUPERVISION AND CONSTRUCTION OF THIS PROJECT WILL BE UNDER MY OBSERVATION. (OBSERVATION OF CONSTRUCTION AS DEFINED IN CHAPTER 16-115 OF THE HAWAII ADMINISTRATIVE RULES, DEPARTMENT OF COMMERCE AND CONSUMER AFFAIRS, ENTITLED PROFESSIONAL ENGINEERS, ARCHITECTS, SURVEYORS AND LANDSCAPE ARCHITECTS).

STATE OF HAWAII
DEPARTMENT OF LAND AND NATURAL RESOURCES
ENGINEERING DIVISION

HAWAII DISTRICT LAND OFFICE
HILO, HAWAI'I

PARTIAL REPAIR FLOOR PLAN

DESIGNED: KK	SUBMITTED:
DRAWN: KA, TW, WL	DATE: NOVEMBER 2022
CHECKED: FE	SCALE: AS NOTED
APPROVED:	
CHIEF ENGINEER	

Carty Chang
E-signed 2022-11-28 04:17PM HST
carty.s.chang@hawaii.gov
State of Hawaii
Chief Engineer

DRAWING NO. A-204

JOB NO. E00BH30A

SHEET NO. 27 OF 77 SHEETS

1 FURNITURE & FINISH FLOOR PLAN

SCALE: 3/8" = 1'-0"

KEY TO INTER. ELEV.

SCALE: 3/8"=1'-0"

GENERAL NOTES

1. ALL WORK SHOWN IS NEW UNLESS OTHERWISE NOTED.
2. SEE SHEET T-002 FOR ADDITIONAL NOTES AND REQUIREMENTS.
3. SEE MECHANICAL, STRUCTURAL & ELECTRICAL DRAWINGS FOR ADDITIONAL REQUIREMENTS.
4. CONCRETE/ASPHALT PAVED WALKWAYS SHALL NOT EXCEED THE FOLLOWING SLOPES:
   -IN DIRECTION OF TRAVEL 1:20, UNLESS OTHERWISE NOTED.
   -CROSS SLOPE OF 1:50.
5. ALL NON-PAVED AREAS DAMAGED AS A RESULT OF NEW WORK SHALL BE RE-PLANTED W/GRASS TO MATCH EXST. ADJ. GRASS AREAS.
6. CONTRACTOR SHALL TONE FOR UTILITY LINES IN ALL AREAS OF THE SITE THAT WILL BE AFFECTED BY THE WORK.
7. ALL DIMENSIONS ARE TAKEN FROM THE FACE OF FIN. UNLESS OTHERWISE NOTED.
8. CONTRACTOR SHALL PAINT ALL UNFINISHED SURFACES, UNLESS OTHERWISE NOTED.
9. FF&E TO BE FURNISHED AND INSTALLED BY THE STATE.

LEGEND (THIS SHEET)

- CERAMIC TILE
- VINYL COMPOSITE TILE VT-1
- VINYL COMPOSITE TILE VT-2
- SEALED CONCRETE WITH EPOXY FLOORING SE-2
- FE FIRE EXTINGUISHER
- FULL HEIGHT PTN
- PARTIAL HEIGHT PTN
- PARTIAL HEIGHT PTN
- CONCRETE MASONRY
- FURNITURE, OFOI

KEYNOTES (THIS SHEET)

KEYNOTE NO.	
1	CHAINLINK GATE FOR MAINTENANCE
2	METAL AWNING ABOVE
3	TRANSACTION COUNTER
4	COUNTER TOP W/ CUBBY STORAGE BELOW

REVISION NO.	SYM.	DESCRIPTION	SHT./OF	DATE	APPROVED

FRED K. ERSKINE
LICENSED PROFESSIONAL ARCHITECT
No. 10192
HAWAII, U.S.A.

THIS LICENSE EXPIRES APRIL 30, 2024

SIGNATURE

THIS WORK WAS PREPARED BY ME, OR UNDER MY SUPERVISION AND COMPLETION OF THIS PROJECT WILL BE UNDER MY OBSERVATION. OBSERVATION OF CONSTRUCTION AS DEFINED IN CHAPTER 16-115 OF THE HAWAII ADMINISTRATIVE RULES, DEPARTMENT OF COMMERCE AND CONSUMER AFFAIRS ENTITLED PROFESSIONAL ENGINEERS, ARCHITECTS, SURVEYORS AND LANDSCAPE ARCHITECTS).

STATE OF HAWAII
DEPARTMENT OF LAND AND NATURAL RESOURCES
ENGINEERING DIVISION

HAWAII DISTRICT LAND OFFICE

HILO, HAWAI'I

FURNITURE AND FINISH FLOOR PLAN

DESIGNED: KK	SUBMITTED:
DRAWN: KA, TW, WL	DATE: NOVEMBER 2022
CHECKED: FE	SCALE: AS NOTED
APPROVED:	Carty Chang E-signed 2022-11-28 04:17PM HST carty.s.chang@hawaii.gov State of Hawaii
CHIEF ENGINEER	Chief Engineer

DRAWING NO. A-205

JOB NO. E00BH30A

SHEET NO. 28 OF 77 SHEETS

GENERAL NOTES

1. ALL WORK SHOWN IS NEW UNLESS OTHERWISE NOTED.
2. SEE SHEET T-002 FOR ADDITIONAL NOTES AND REQUIREMENTS.
3. SEE CIVIL, LANDSCAPE, MECHANICAL, STRUCTURAL & ELECTRICAL DRAWINGS FOR ADDITIONAL REQUIREMENTS.
4. CONCRETE/ASPHALT PAVED WALKWAYS SHALL NOT EXCEED THE FOLLOWING SLOPES:
   - IN DIRECTION OF TRAVEL 1:20, UNLESS OTHERWISE NOTED.
   - CROSS SLOPE OF 1:50.
5. ALL NON-PAVED AREAS DAMAGED AS A RESULT OF NEW WORK SHALL BE RE-PLANTED W/GRASS TO MATCH EXST. ADJ. GRASS AREAS.
6. CONTRACTOR SHALL TONE FOR UTILITY LINES IN ALL AREAS OF THE SITE THAT WILL BE AFFECTED BY THE WORK.
7. ALL DIMENSIONS ARE TAKEN FROM THE FACE OF FIN. UNLESS OTHERWISE NOTED.
8. CONTRACTOR SHALL PAINT ALL UNFINISHED SURFACES, UNLESS OTHERWISE NOTED.

LEGEND (THIS SHEET)

- TUBULAR DAYLIGHTNG DEVICE W/CRICKET
- GOOSENECK EXHAUST W/CRICKET
- VENT-THRU-ROOF
- DS LEADERBOX & DOWNSPOUT
- PHOTOVOLTAIC SYSTEM
- WALKWAY PAD

KEYNOTES (THIS SHEET)

KEYNOTE NO.	
1	EXTERIOR GRADE METER, DISCONNECT & INVERTER BELOW AWNING. SEE ELEC DRWG.
2	APPROXIMATE AREA AND AMOUNT OF PHOTOVOLTAIC (PV) ARRAY. CONTRACTOR IS RESPONSIBLE FOR THE DESIGN AND INSTALLATION OF FINAL PV SYSTEM. SEE SPECIFICATIONS.
3	WALKING PAD FOR MAINTENANCE.
4	METAL AWNING WITH GUTTER BELOW.
5	ROOF ACCESS POINT.
6	ROOF RIDGE.
7	CONDUIT THROUGH ROOF FOR PV SYSTEM.
8	ELECTRICAL METER BELOW.
9	PV DISCONNECT SWITCH BELOW.

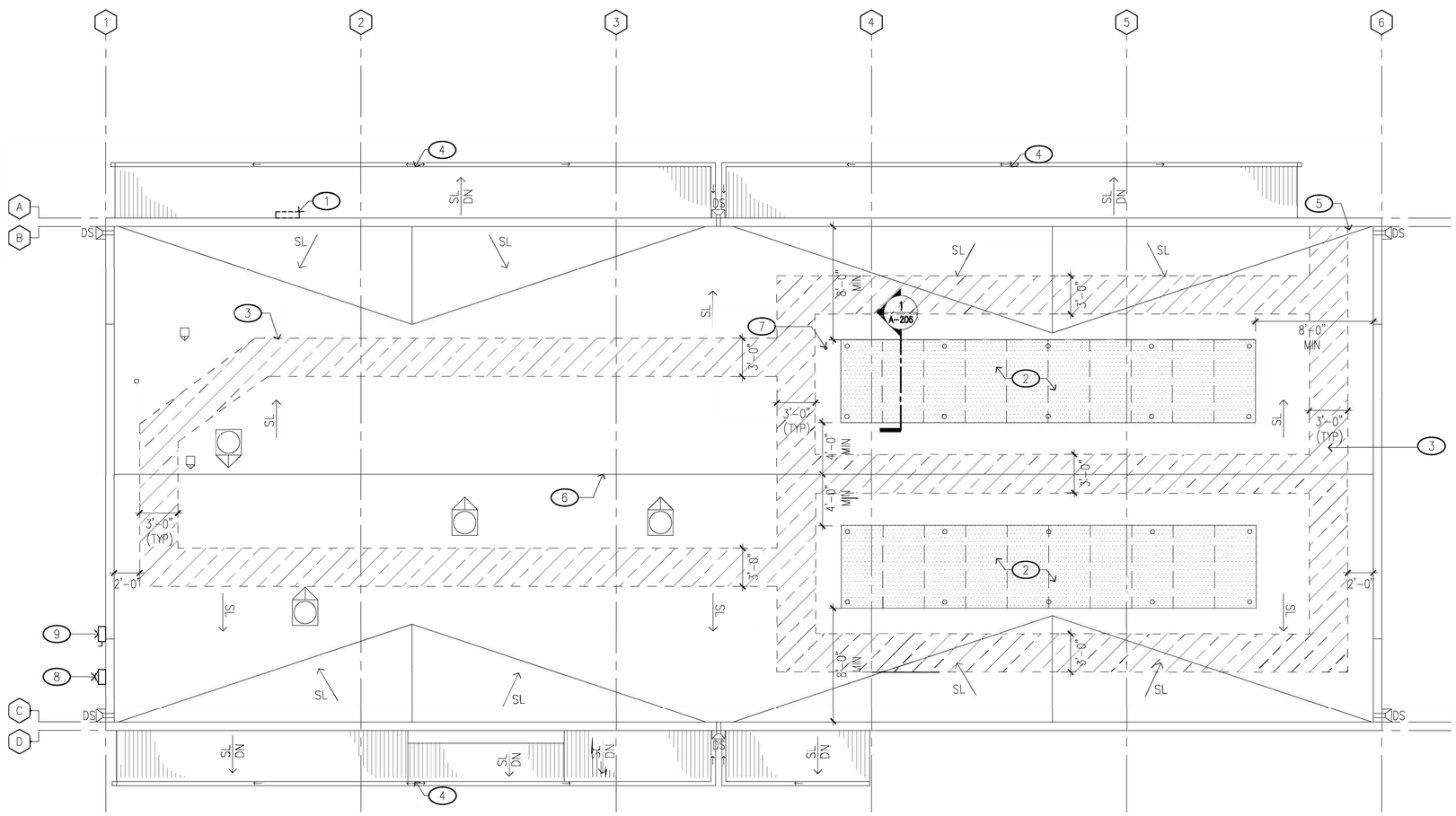

1 PHOTOVOLTAIC SYSTEM (ADDITIVE BID NO. 3)
SCALE: 3/16" = 1'-0"

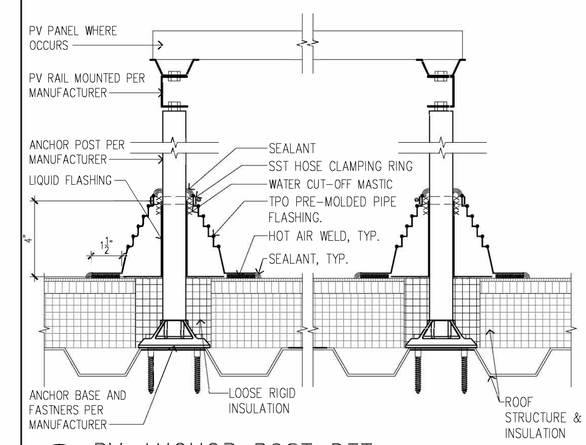

1 PV ANCHOR POST DET
SCALE: 3" = 1'-0"

0 2' 4' 6' 8' 10 12'
SCALE: 3/16" = 1'-0"

WEST SOUTH NORTH EAST

REVISION NO.	SYM.	DESCRIPTION	SHT./OF	DATE	APPROVED

FRED K. ERSKINE
LICENSED PROFESSIONAL ARCHITECT
No. 10192
HAWAII, U.S.A.

THIS LICENSE EXPIRES APRIL 30, 2024

SIGNATURE

THIS WORK WAS PREPARED BY ME, OR UNDER MY SUPERVISION AND CONSTRUCTION OF THIS PROJECT WILL BE SUBJECT TO ON-SITE OBSERVATION DURING CONSTRUCTION AS DEFINED IN CHAPTER 16-115 OF THE HAWAII ADMINISTRATIVE RULES, DEPARTMENT OF COMMERCE AND CONSUMER AFFAIRS ENTITLED PROFESSIONAL ENGINEERS, ARCHITECTS, SURVEYORS AND LANDSCAPE ARCHITECTS).

STATE OF HAWAII
DEPARTMENT OF LAND AND NATURAL RESOURCES
ENGINEERING DIVISION

HAWAII DISTRICT LAND OFFICE
HILO, HAWAI'I

ADDITIVE BID NO. 1 - PV SYSTEM

DESIGNED: KK	SUBMITTED:
DRAWN: KA, TW, WL	DATE: NOVEMBER 2022
CHECKED: FE	SCALE: AS NOTED
APPROVED: CHIEF ENGINEER	Carty Chang E-signed 2022-11-28 04:17PM HST carty.s.chang@hawaii.gov State of Hawaii Chief Engineer

DRAWING NO. A-206

GENERAL NOTES

1. ALL WORK SHOWN IS NEW UNLESS OTHERWISE NOTED.
2. SEE SHEET T-002 FOR ADDITIONAL NOTES AND REQUIREMENTS.
3. SEE CIVIL, LANDSCAPE, MECHANICAL, STRUCTURAL & ELECTRICAL DRAWINGS FOR ADDITIONAL REQUIREMENTS.
4. CONCRETE/ASPHALT PAVED WALKWAYS SHALL NOT EXCEED THE FOLLOWING SLOPES:
   - IN DIRECTION OF TRAVEL 1:20, UNLESS OTHERWISE NOTED.
   - CROSS SLOPE OF 1:50.
5. ALL NON-PAVED AREAS DAMAGED AS A RESULT OF NEW WORK SHALL BE RE-PLANTED W/GRASS TO MATCH EXST. ADJ. GRASS AREAS.
6. CONTRACTOR SHALL TONE FOR UTILITY LINES IN ALL AREAS OF THE SITE THAT WILL BE AFFECTED BY THE WORK.
7. ALL DIMENSIONS ARE TAKEN FROM THE FACE OF FIN. UNLESS OTHERWISE NOTED.
8. CONTRACTOR SHALL PAINT ALL UNFINISHED SURFACES, UNLESS OTHERWISE NOTED.
9. ALL EXTERIOR CMU WALLS SHALL BE SEALED, PRIMED, AND PAINTED AS SPECIFIED.

LEGEND (THIS SHEET)

- PAINTED CMU
- DEFS FINISH
- WALL SCONE
- SAFETY DISCONNECT SWITCH
- TEL/DATA SWITCH
- HELCO METER
- X OPERABLE WINDOW PANEL
- O FIXED WINDOW PANEL

KEYNOTES (THIS SHEET)

KEYNOTE NO.	
1	DEFS ENTRY, BUILD-OUT.
2	METAL AWNING WITH GUTTER & DOWNSPOUT.
3	PARAPET COPING.
4	METAL DOWNSPOUT & LEADERBOX.
5	KEYPAD LOCKSET.
6	ROOF RIDGE.
7	CONC EQUIPMENT PAD & MECH EQUIPMENT, SEE MECH DRWG.
8	EXST CMU WALL PRIME & PAINT AS SCHEDULED.
9	CMU INFILL, ALIGN WITH EXST GROUT LINES, PRIME & PAINT AS SCHEDULED.
10	WINDOW ASSEMBLY, TYP. SEE IECC 2015 NOTE FOR MORE INFORMATION.
11	CONC WALKWAY.
12	CONC CURB. SEE CIVIL DRWG.
13	METAL DOOR & FRAME PRIME & PAINT.
14	STOREFRONT AS SCHEDULED.
15	ADA SIGNAGE.
16	OUTSIDE AIR INTAKE LOUVER.
17	GOOSENECK EXHAUST.
18	TUBULAR DAYLIGHTING DEVICE..
19	ELECTRONIC GATE & OPERATOR ON CONC PAD.
20	DEFS ENTRY BUILD-OUT BEYOND.
21	METAL AWNING BEYOND.
22	METAL DOWNSPORT & LEADER BEYOND.
23	CONC WALKWAY BEYOND.
24	CONC RAMP.
25	CONNECT AWNING DOWNSPOUT TO BUILDING DOWNSPOUT FOR DRAINAGE TO LANDSCAPE.
26	CONC HEADER, SEE CIVIL DRWG.
27	PRE-CAST CONC SPLASH BLOCK.
28	SITE SIGNAGE.
29	CAST IN PLACE CONCRETE FRAME, SEE STRUCT DRAWINGS.
30	CONC CURB, SEE CIVIL DRWG.
30	AC CONDENSATE LINES, PENETRATE ABOVE CEILING

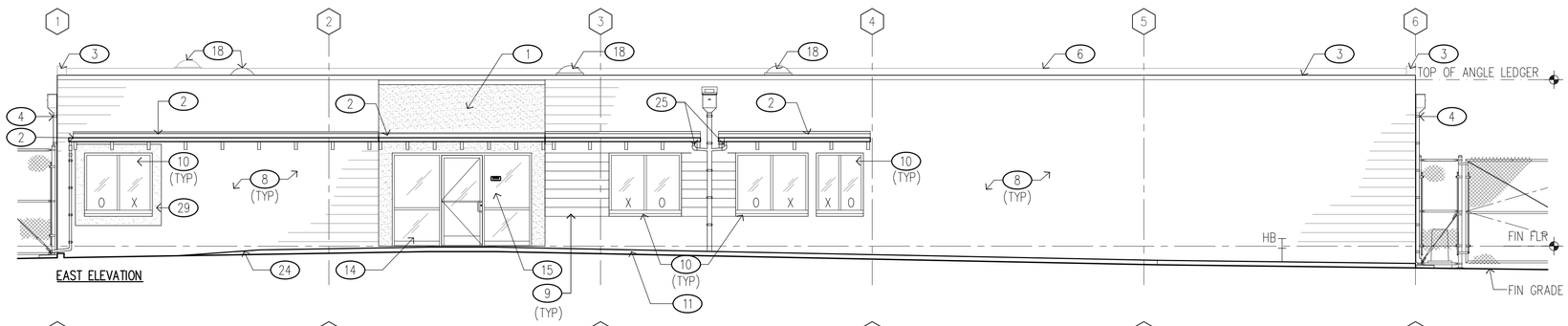

EAST ELEVATION

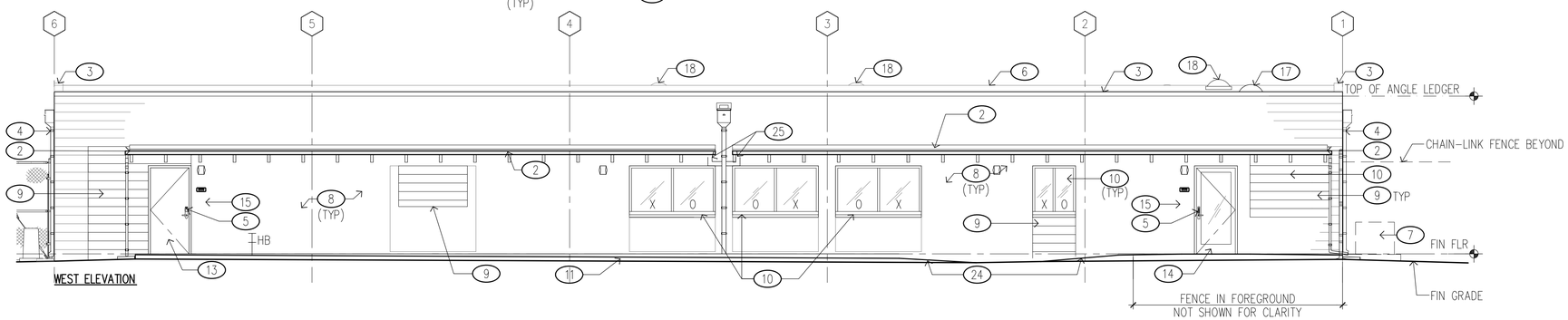

WEST ELEVATION

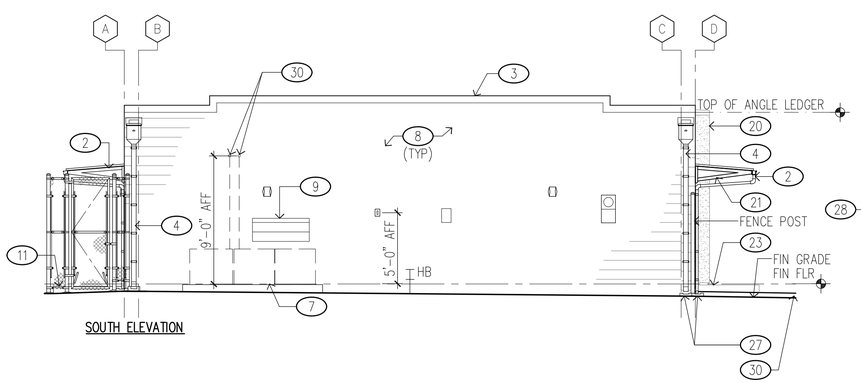

SOUTH ELEVATION

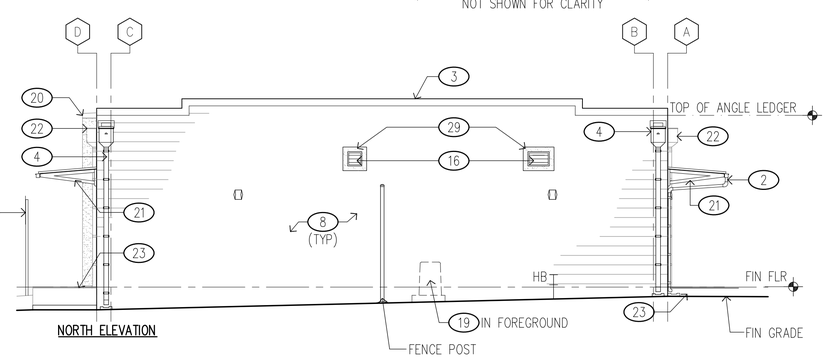

NORTH ELEVATION

IECC 2015 NOTE:

WINDOW AREAS ARE ≤ 30% OF GROSS WALL AREAS

0 2' 4' 6' 8' 10 12'

SCALE: 3/16" = 1'-0"

1 EXTERIOR ELEVATIONS

SCALE: 3/16" = 1'-0"

REVISION NO.	SYM.	DESCRIPTION	SHT./OF	DATE	APPROVED

FRED K. ERSKINE
LICENSED PROFESSIONAL ARCHITECT
No. 10192
HAWAII, U.S.A.

THIS LICENSE EXPIRES APRIL 30, 2024

SIGNATURE

THIS WORK WAS PREPARED BY ME, OR UNDER MY SUPERVISION AND CONSTRUCTION OF THIS PROJECT WILL BE UNDER MY OBSERVATION. (OBSERVATION OF CONSTRUCTION AS DEFINED IN CHAPTER 16-115 OF THE HAWAII ADMINISTRATIVE RULES, DEPARTMENT OF COMMERCE AND CONSUMER AFFAIRS, REGULATED PROFESSIONAL ENGINEERS, ARCHITECTS, SURVEYORS AND LANDSCAPE ARCHITECTS).

STATE OF HAWAII
DEPARTMENT OF LAND AND NATURAL RESOURCES
ENGINEERING DIVISION

HAWAII DISTRICT LAND OFFICE
HILO, HAWAI'I

EXTERIOR ELEVATIONS

DESIGNED: KK	SUBMITTED:
DRAWN: KA, TW, WL	DATE: NOVEMBER 2022
CHECKED: FE	SCALE: AS NOTED
APPROVED:	Carty Chang E-signed 2022-11-28 04:17PM HST carty.s.chang@hawaii.gov State of Hawaii
CHIEF ENGINEER	Chief Engineer

DRAWING NO. A-301

GENERAL NOTES

1. ALL WORK SHOWN IS NEW UNLESS OTHERWISE NOTED.
2. SEE SHEET T-002 FOR ADDITIONAL NOTES AND REQUIREMENTS.
3. SEE CIVIL, LANDSCAPING, MECHANICAL, STRUCTURAL & ELECTRICAL DRAWINGS FOR ADDITIONAL REQUIREMENTS.
4. CONCRETE/ASPHALT PAVED WALKWAYS SHALL NOT EXCEED THE FOLLOWING SLOPES:
   - IN DIRECTION OF TRAVEL 1:20, UNLESS OTHERWISE NOTED.
   - CROSS SLOPE OF 1:50.
5. ALL NON-PAVED AREAS DAMAGED AS A RESULT OF NEW WORK SHALL BE RE-PLANTED W/GRASS TO MATCH EXST. ADJ. GRASS AREAS.
6. CONTRACTOR SHALL TONE FOR UTILITY LINES IN ALL AREAS OF THE SITE THAT WILL BE AFFECTED BY THE WORK.
7. ALL DIMENSIONS ARE TAKEN FROM THE FACE OF FIN. UNLESS OTHERWISE NOTED.
8. CONTRACTOR SHALL PAINT ALL UNFINISHED SURFACES, UNLESS OTHERWISE NOTED.

LEGEND (THIS SHEET)

LIGHT FIXTURE

HVAC SYSTEM

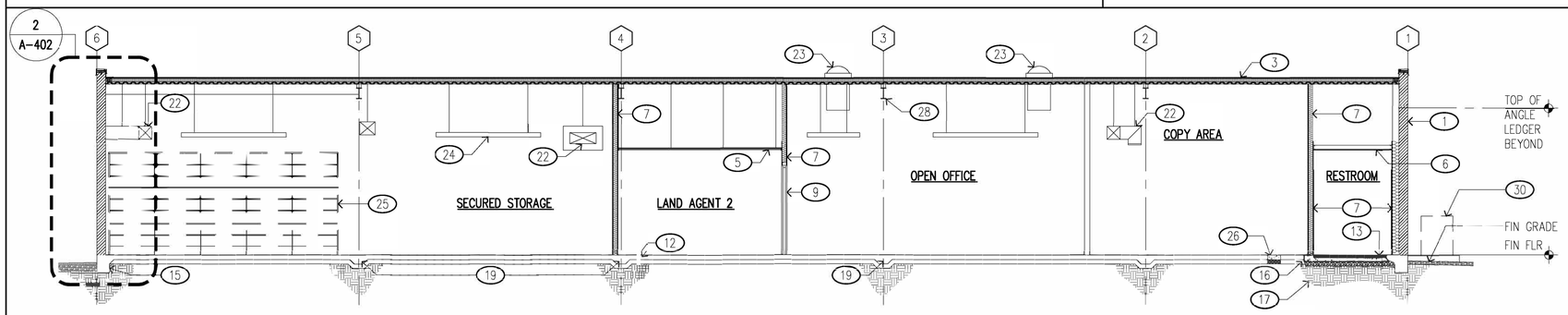

1A LONGITUDINAL SECTION
SCALE: 3/16" = 1'-0"

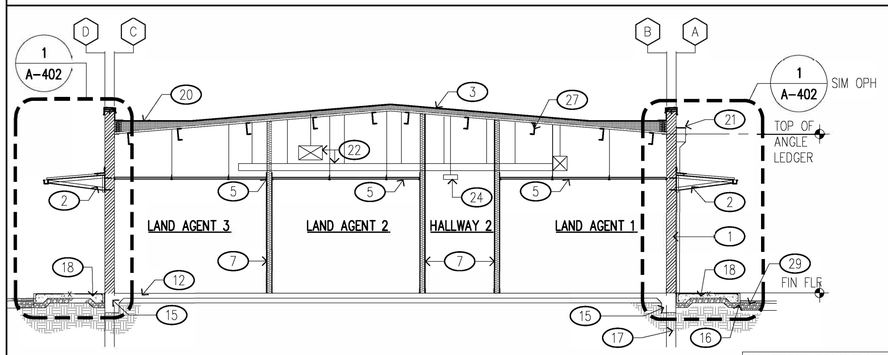

1B CROSS SECTION 1
SCALE: 3/16" = 1'-0"

NOTE: CONTRACTOR TO VERIFY LOCATION OF SCUPPERS WITH ARCHITECT AND STRUCTURAL.

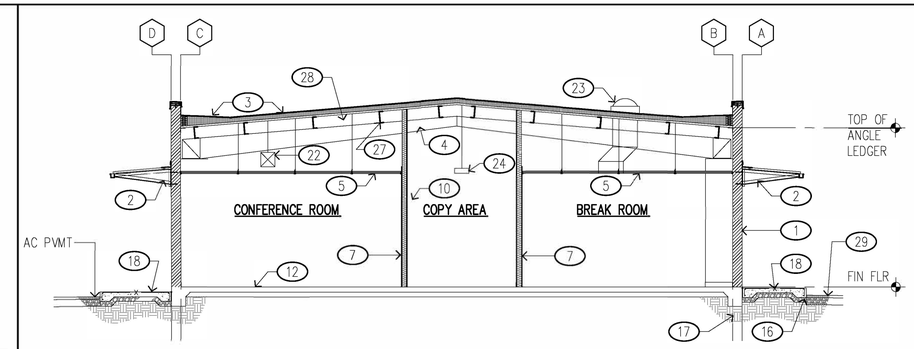

1C CROSS SECTION 2
SCALE: 3/16" = 1'-0"

0 2' 4' 6' 8' 10 12'
SCALE: 3/16" = 1'-0"

KEYNOTES (THIS SHEET)

KEYNOTE NO.	
1	EXST CMU WALL, TYP.
2	METAL AWNING.
3	TPO ROOF W/ RIGID INSULATION ON METAL DECKING, TYP.
4	NOT USED.
5	SUSPENDED ACOUSTIC TILE CEILING.
6	GYP BD CEILING.
7	PARTITION AS SCHED.
8	NOT USED.
9	DOOR AND FRAME WHERE OCCURS.
10	NOT USED.
11	NOT USED.
12	EXST CONC SOG WHERE OCCURS.
13	MORTAR BED REINFORCED W/ WIRE MESH AT DEPRESSED CONC SLAB, SEE STRUCT DRWG.
14	NOT USED.
15	EXST CONC FOOTING, TYP.
16	BASE COURSE, TYP.
17	EXST GRADE, TYP.
18	CONC WALKWAY, TYP.
19	EXST GRADE BEAMS, TYP.
20	CRICKET
21	LEADER BOX AND DOWNSPOUT BEYOND.
22	HVAC DUCT, SEE MECH DRWG. TYP.
23	TUBULAR DAYLIGHT DEVICE.
24	SUSPENDED LIGHT FIXTURE, SEE ELEC DRWG, TYP.
25	ADDITIVE ALTERNATE NO. 2 ELECTRONIC HIGH DENSITY STORAGE SYSTEM, SEE ELEC DRWG & SPECIFICATIONS.
26	PATCH CONC FLOOR WHERE OCCURS.
27	EXST METAL PURLIN.
28	EXST STEEL BEAM.
29	AC PAVEMENT.
30	CONDENSING UNIT, SEE MECH DRAWINGS.

REVISION NO.	SYM.	DESCRIPTION	SHT/OF	DATE	APPROVED

FRED K. ERSKINE
LICENSED PROFESSIONAL ARCHITECT
No. 10192
HAWAII, U.S.A.

THIS LICENSE EXPIRES APRIL 30, 2024

SIGNATURE

THIS WORK WAS PREPARED BY ME OR UNDER MY SUPERVISION AND CONSTRUCTION OF THIS PROJECT WILL BE UNDER MY OBSERVATION. (OBSERVATION OF CONSTRUCTION AS DEFINED IN CHAPTER 16-115 OF THE HAWAII ADMINISTRATIVE RULES, DEPARTMENT OF COMMERCE AND CONSUMER AFFAIRS, ENTITLED PROFESSIONAL ENGINEERS, ARCHITECTS, SURVEYORS AND LANDSCAPE ARCHITECTS).

STATE OF HAWAII
DEPARTMENT OF LAND AND NATURAL RESOURCES
ENGINEERING DIVISION

HAWAII DISTRICT LAND OFFICE
HILO, HAWAI'I

BUILDING SECTIONS

DESIGNED: KK	SUBMITTED:
DRAWN: KA, TW, WL	DATE: NOVEMBER 2022
CHECKED: FE	SCALE: AS NOTED
APPROVED:	DRAWING NO. A-401
CHIEF ENGINEER	

Carty Chang
E-signed 2022-11-28 04:17PM HST
carty.s.chang@hawaii.gov
State of Hawaii
Chief Engineer

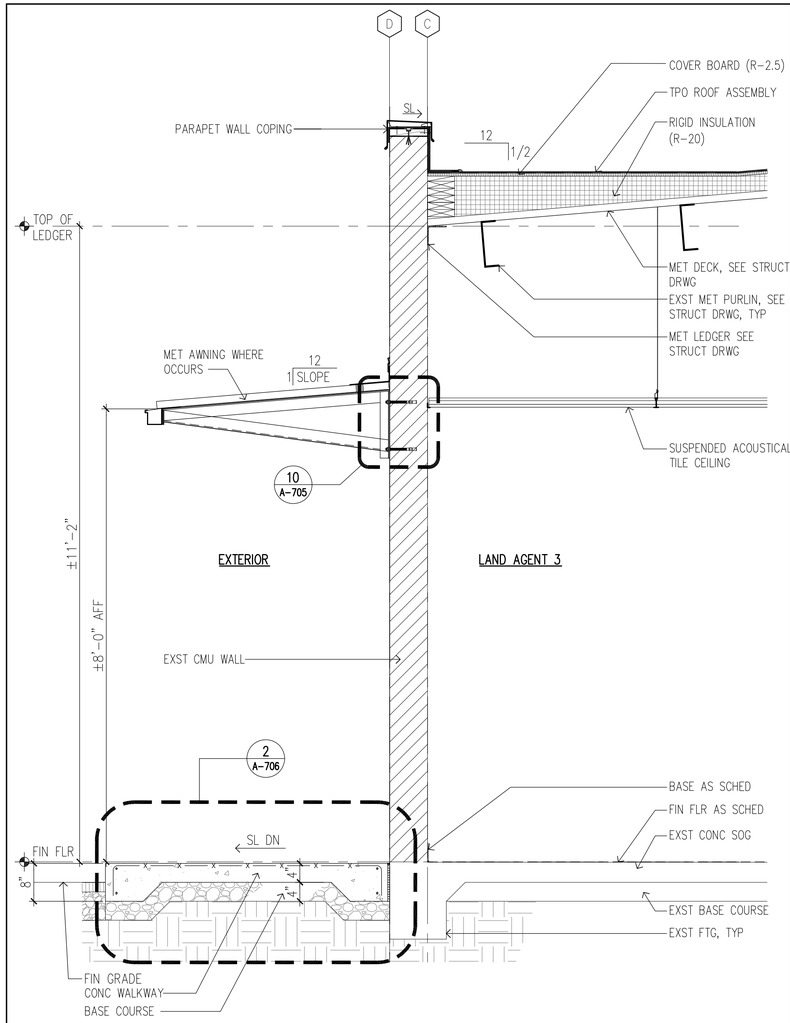

1 WALL SECTION

SCALE: 3/4" = 1'-0"

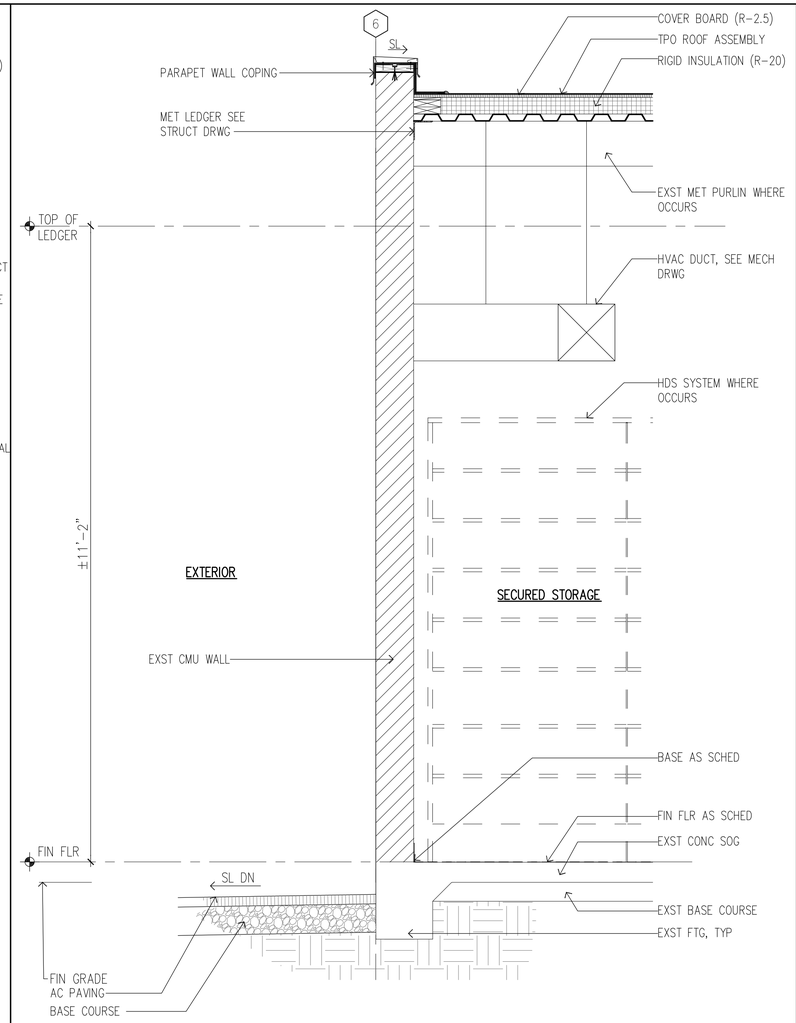

2 WALL SECTION

SCALE: 3/4" = 1'-0"

NOTE: FOR BALANCE OF NOTES & DIMENSIONS SEE 1/A-402

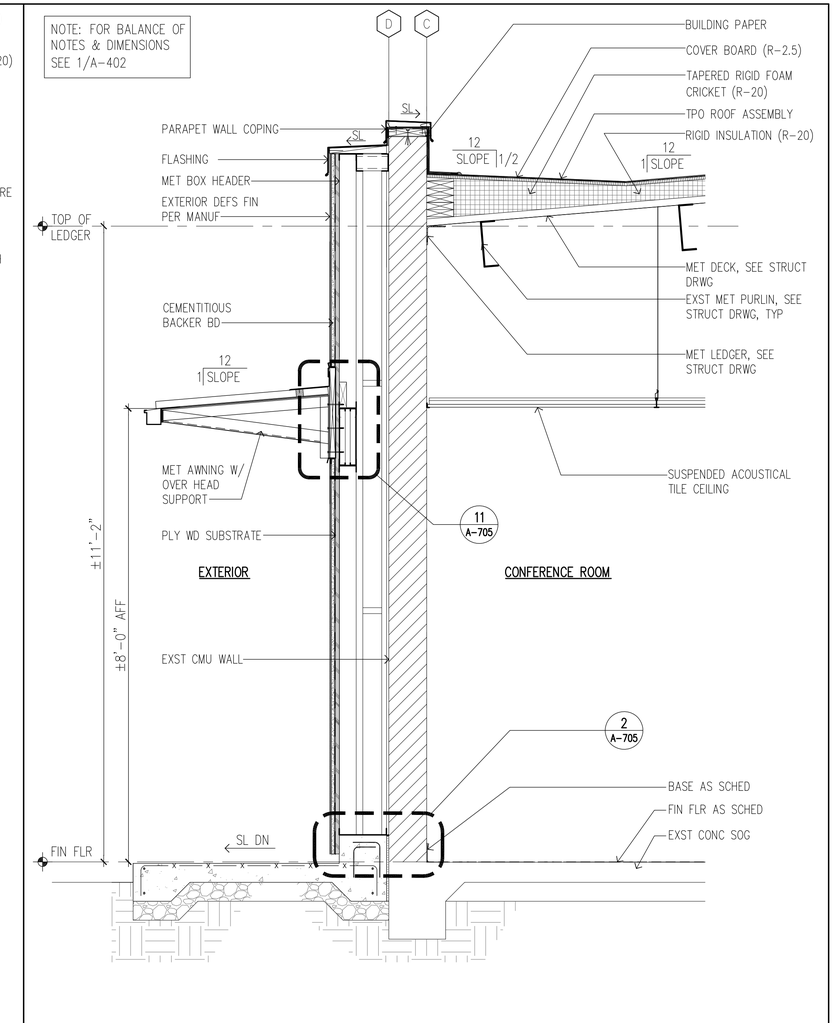

3 WALL SECTION AT DEFS ENTRY BUILD-OUT

SCALE: 3/4" = 1'-0"

0 1' 2' 3'

SCALE: 3/4" = 1'-0"

REVISION NO.	SYM.	DESCRIPTION	SHT./OF	DATE	APPROVED

FRED K. ERSKINE
LICENSED PROFESSIONAL ARCHITECT
No. 10192
HAWAII, U.S.A.

THIS LICENSE EXPIRES APRIL 30, 2024

SIGNATURE

THIS WORK WAS PREPARED BY ME OR UNDER MY SUPERVISION AND CONSTRUCTION OF THIS PROJECT WILL BE UNDER MY OBSERVATION. (OBSERVATION OF CONSTRUCTION AS DEFINED IN CHAPTER 16-115 OF THE HAWAII ADMINISTRATIVE RULES, DEPARTMENT OF COMMERCE AND CONSUMER AFFAIRS ENTITLED PROFESSIONAL ENGINEERS, ARCHITECTS, SURVEYORS AND LANDSCAPE ARCHITECTS).

STATE OF HAWAII
DEPARTMENT OF LAND AND NATURAL RESOURCES
ENGINEERING DIVISION

HAWAII DISTRICT LAND OFFICE

HILO, HAWAI'I

WALL SECTIONS

DESIGNED: KK	SUBMITTED:
DRAWN: KA, TW, WL	DATE: NOVEMBER 2022
CHECKED: FE	SCALE: AS NOTED
APPROVED:	Carty Chang E-signed 2022-11-28 04:17PM HST carty.s.chang@hawaii.gov State of Hawaii
CHIEF ENGINEER	Chief Engineer

DRAWING NO.

A-402

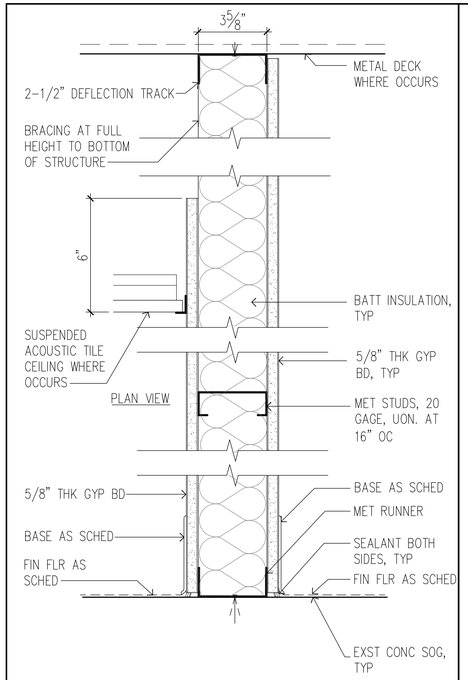

A FULL HEIGHT PARTITION
SCALE: 3" = 1'-0"

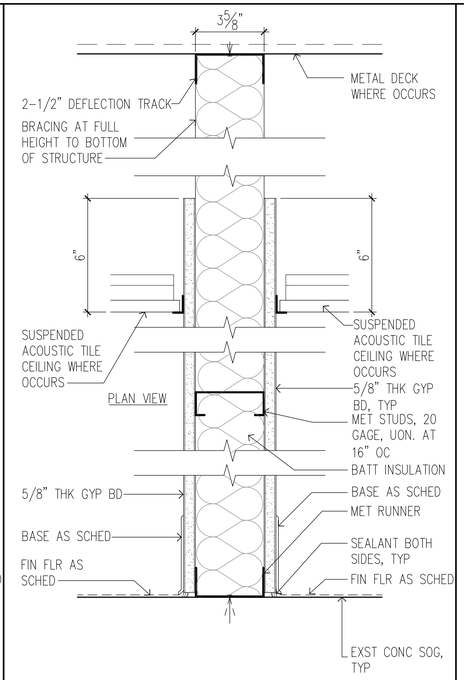

B FULL HEIGHT PARTITION
SCALE: 3" = 1'-0"

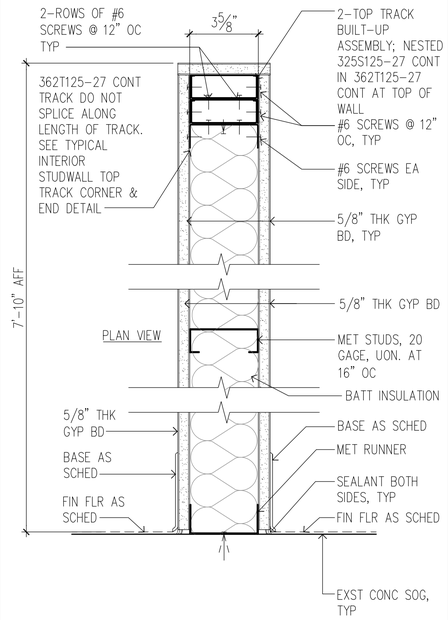

C1 PARTIAL HEIGHT PARTITION
SCALE: 3" = 1'-0"

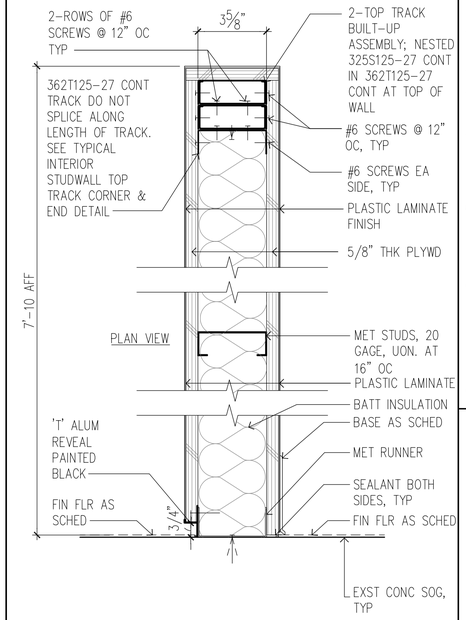

C2 PARTIAL HEIGHT PARTITION
SCALE: 3" = 1'-0"

PARTITION SCHEDULE NOTES

1. PARTITION TYPES INDICATE GENERIC PARTITION CONSTRUCTION, UON.
2. CONTRACTOR SHALL FIELD VERIFY REQUIRED FLOOR/CEILING CONNECTION AND INSTALL PARTITIONS TO MAINTAIN SPECIFIED FIRE RATING.
3. GYP. BD.: 5/8" THK. TYPE "X" U.O.N.
4. SEE DET 1/A403 FOR BACKING PLATE REQUIREMENTS FOR ARTWORK, TOILET ACCESSORIES, GRAB BARS, COUNTERS, CABINETRY AND SHELVING.
5. TYPICAL CONDITIONS (UON):
   - 5.1. TERMINATION: TERMINATE STUDS AT METAL DECK; ALLOW FOR DEFLECTION.
   - 5.2. PERIMETER RELIEF: WHERE PARTITIONS MEET STRUCTURE OR DISSIMILAR CONSTRUCTION, PROVIDE PERIMETER RELIEF.
6. FIRE RATED PARTITION FACE MATERIAL TERMINATIONS: CONTINUOUS FROM TOP OF FLOOR SLAB TO STRUCTURE ABOVE.
7. GYPSUM BOARD APPLICATION AND FINISHING SHALL BE PER GYPSUM ASSOCIATION PUBLICATIONS FOR USE AND INSTALLATION.
8. ACOUSTICAL PARTITION:
   - 8.1. TO BE INSTALLED PER ASTM E497, STANDARD PRACTICE FOR INSTALLING SOUND-ISOLATING GYPSUM BOARD PARTITIONS, AND ASTM C919, STANDARD PRACTICE FOR USE OF SEALANTS IN ACOUSTICAL APPLICATIONS.
   - 8.2. PARTITION SUBSTRATE MATERIAL TERMINATION IS CONTINUOUS FROM TOP OF FLOOR SLAB TO SOFFIT OF STRUCTURE ABOVE.
9. PROVIDE WATERPROOFING AT ALL CERAMIC TILE FLOORS AND WAINSCOTS.

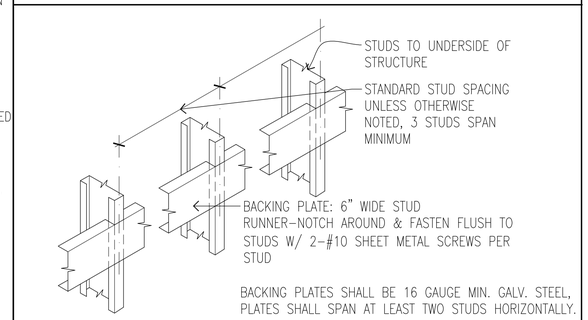

1 BACKING DETAIL
SCALE: 3"=1'-0"

0 3" 6" 9" 1'
SCALE: 3" = 1'-0"

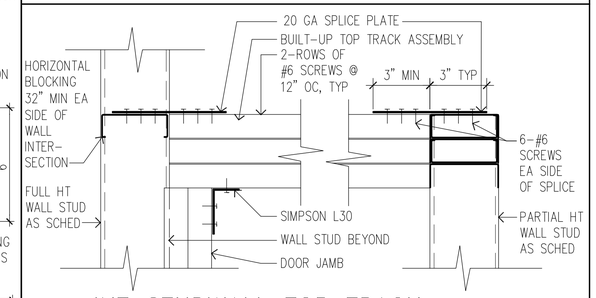

2 INT STUDWALL TOP TRACK CORNER AND END DETAIL
SCALE: 3"=1'-0"

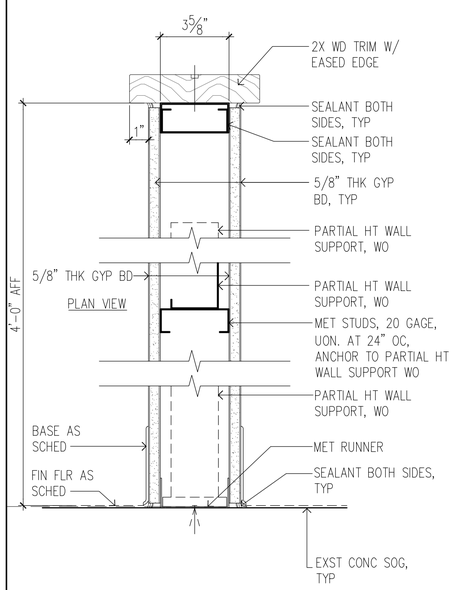

D PARTIAL HEIGHT PARTITION
SCALE: 3" = 1'-0"

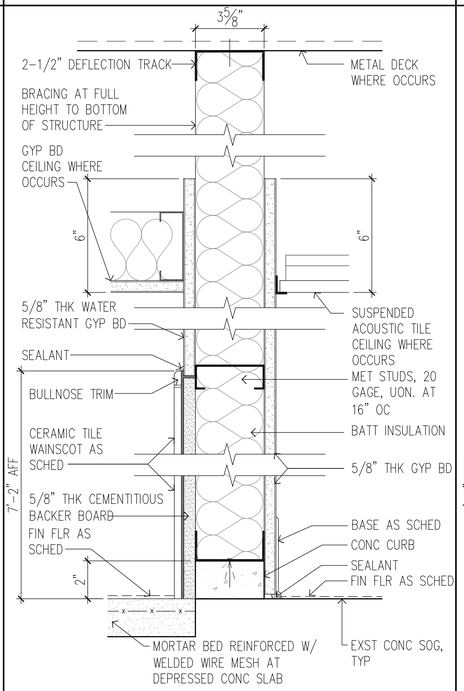

E1 CEMENTITIOUS PARTITION
SCALE: 3" = 1'-0"

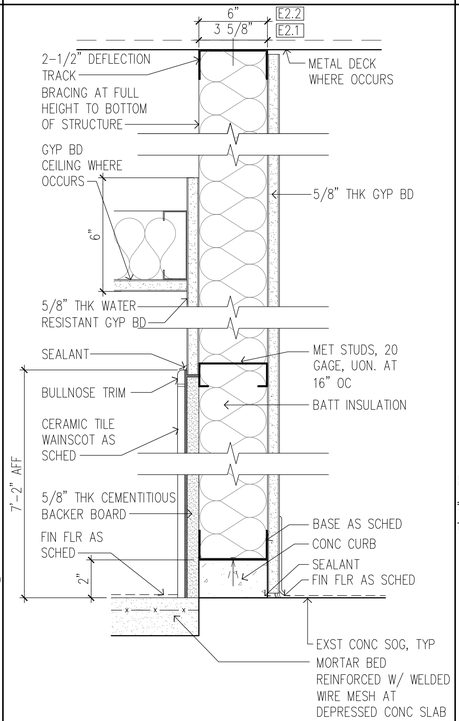

E2 CEMENTITIOUS PARTITION
SCALE: 3" = 1'-0"

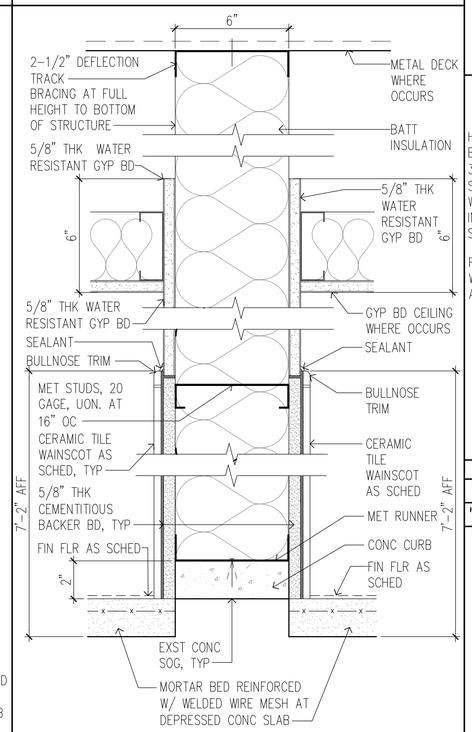

F CEMENTITIOUS PARTITION
SCALE: 3" = 1'-0"

REVISION NO.	SYM.	DESCRIPTION	SHT./OF	DATE	APPROVED

FRED K. ERSKINE
LICENSED PROFESSIONAL ARCHITECT
No. 10192
HAWAII, U.S.A.

THIS LICENSE EXPIRES APRIL 30, 2024

SIGNATURE

THIS WORK WAS PREPARED BY ME OR UNDER MY SUPERVISION AND COMPLETED ON THIS PROJECT WILL BE UNDER MY OBSERVATION. OBSERVATION OF CONSTRUCTION AS DEFINED IN CHAPTER 16-115 OF THE HAWAII ADMINISTRATIVE RULES, DEPARTMENT OF COMMERCE AND CONSUMER AFFAIRS ENTITLED PROFESSIONAL ENGINEERS, ARCHITECTS, SURVEYORS AND LANDSCAPE ARCHITECTS).

STATE OF HAWAII
DEPARTMENT OF LAND AND NATURAL RESOURCES
ENGINEERING DIVISION

HAWAII DISTRICT LAND OFFICE
HILO, HAWAI'I

PARTITION TYPES

DESIGNED: KK	SUBMITTED:
DRAWN: KA, TW, WL	DATE: NOVEMBER 2022
CHECKED: FE	SCALE: AS NOTED
APPROVED:	Carty Chang E-signed 2022-11-28 04:17PM HST carty.s.chang@hawaii.gov State of Hawaii Chief Engineer
CHIEF ENGINEER	DRAWING NO. A-403

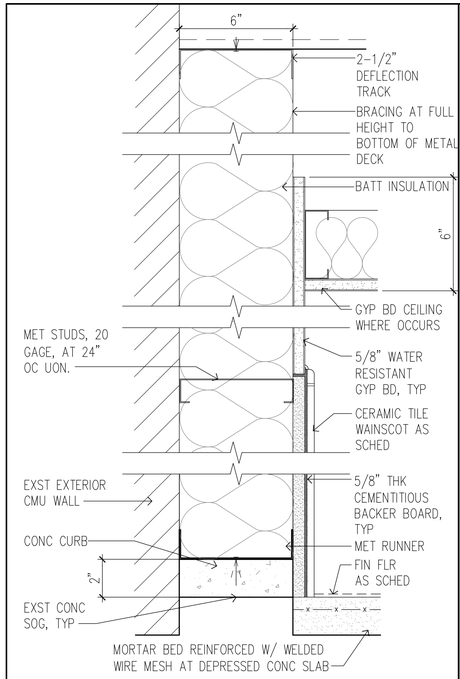

G FURRED WALL AT RESTROOM

SCALE: 3" = 1'-0"

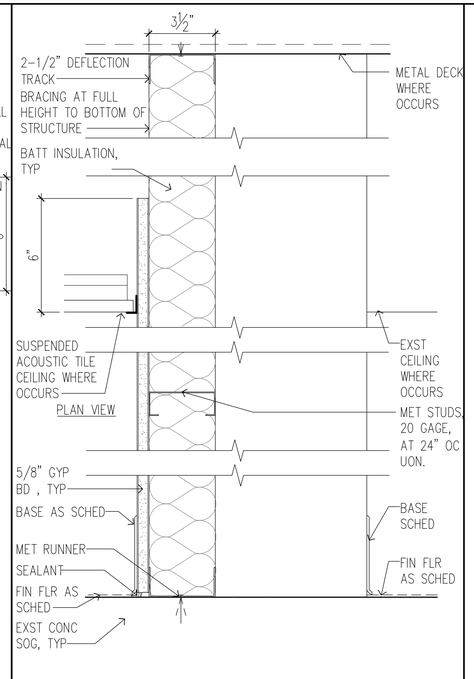

H FURRED WALL AT VAULT

SCALE: 3" = 1'-0"

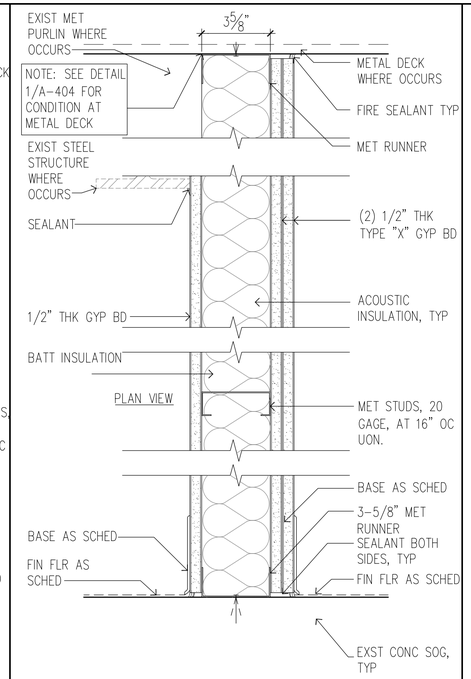

GA FILE NO. WP 1021

J 1-HR FIRE RATED PARTITION

SCALE: 3" = 1'-0"

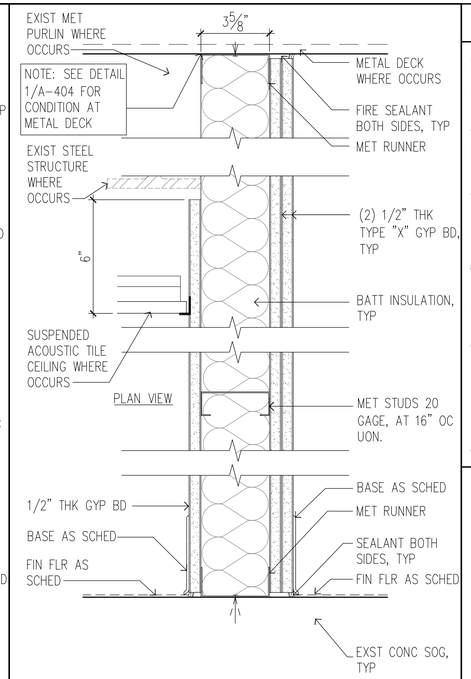

GA FILE NO. WP 1021

K 1-HR FIRE RATED PARTITION

SCALE: 3" = 1'-0"

PARTITION SCHEDULE NOTES

1. PARTITION TYPES INDICATE GENERIC PARTITION CONSTRUCTION, UON.
2. CONTRACTOR SHALL FIELD VERIFY REQUIRED FLOOR/CEILING CONNECTION AND INSTALL PARTITIONS TO MAINTAIN SPECIFIED FIRE RATING.
3. GYP. BD.: 5/8" THK. TYPE "X" U.O.N.
4. SEE DET 1/A-403 FOR BACKING PLATE REQUIREMENTS FOR ARTWORK, TOILET ACCESSORIES, GRAB BARS, COUNTERS, CABINETRY AND SHELVING.
5. TYPICAL CONDITIONS (UON):
   - 5.1. TERMINATION: TERMINATE STUDS AT STRUCTURAL SOFFIT; ALLOW FOR DEFLECTION.
   - 5.2. PERIMETER RELIEF: WHERE PARTITIONS MEET STRUCTURE OR DISSIMILAR CONSTRUCTION, PROVIDE PERIMETER RELIEF.
6. FIRE RATED PARTITION FACE MATERIAL TERMINATIONS: CONTINUOUS FROM TOP OF FLOOR SLAB TO STRUCTURE ABOVE.
7. GYPSUM BOARD APPLICATION AND FINISHING SHALL BE PER GYPSUM ASSOCIATION PUBLICATIONS FOR USE AND INSTALLATION.
8. ACOUSTICAL PARTITION:
   - 8.1. TO BE INSTALLED PER ASTM E497, STANDARD PRACTICE FOR INSTALLING SOUND-ISOLATING GYPSUM BOARD PARTITIONS, AND ASTM C919, STANDARD PRACTICE FOR USE OF SEALANTS IN ACOUSTICAL APPLICATIONS.
   - 8.2. PARTITION SUBSTRATE MATERIAL TERMINATION IS CONTINUOUS FROM TOP OF FLOOR SLAB TO SOFFIT OF STRUCTURE ABOVE.
9. PROVIDE WATERPROOFING AT ALL CERAMIC TILE FLOORS AND WAINSCOTS.

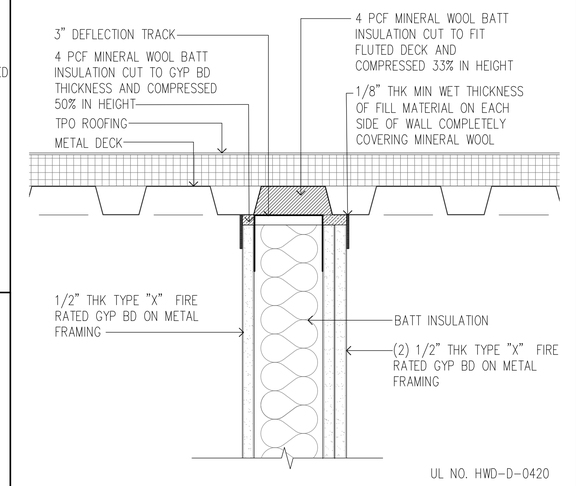

1 FIRE RATED PARTITION DETAIL AT METAL DECK

SCALE: 3" = 1'-0"

0 3" 6" 9" 1'
SCALE: 3" = 1'-0"

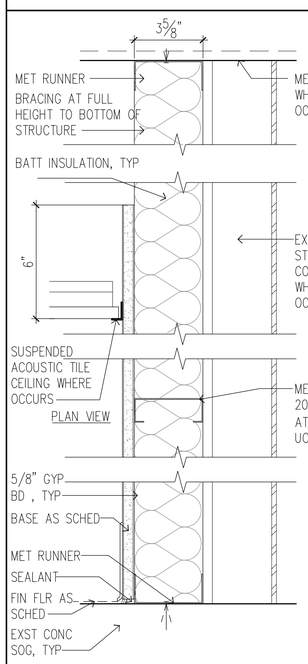

L FURRED WALL AT COLUMN

SCALE: 3" = 1'-0"

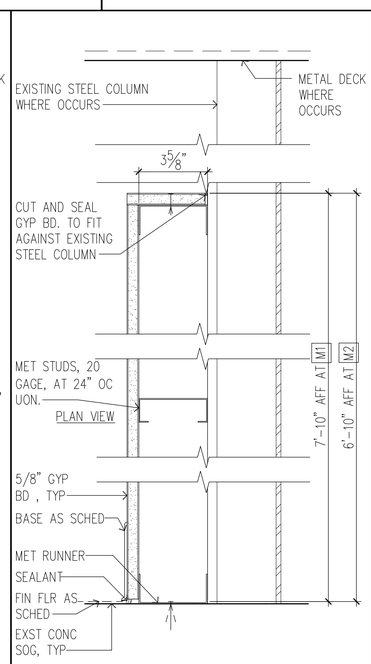

M FURRED WALL AT COLUMN

SCALE: 3" = 1'-0"

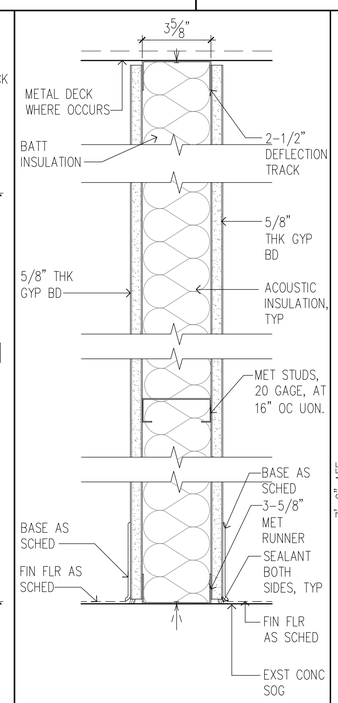

N FULL HEIGHT PARTITION

SCALE: 3" = 1'-0"

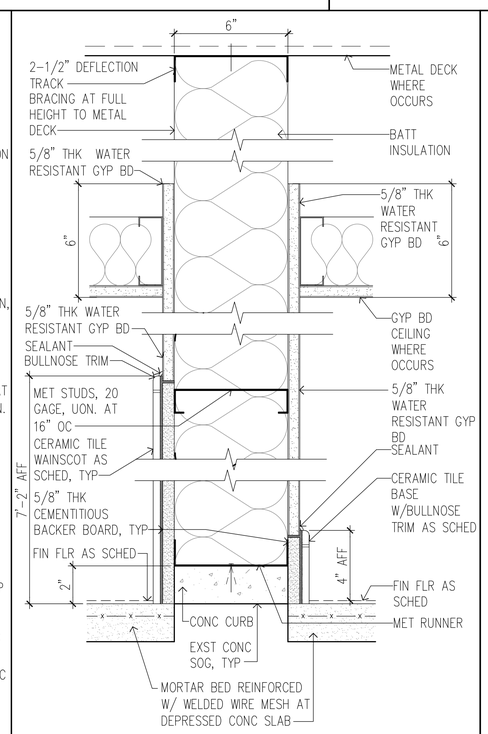

P CEMENTITIOUS PARTITION

SCALE: 3" = 1'-0"

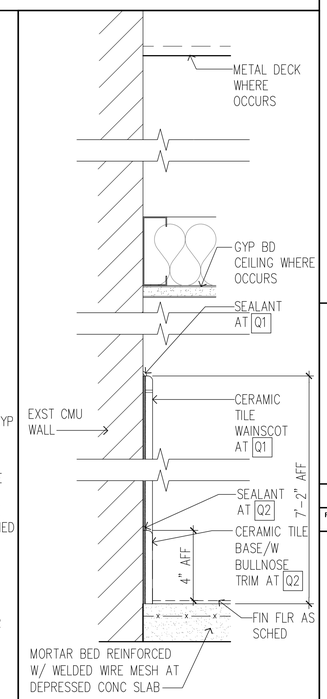

Q CMU WALL AT UTILITY ROOM

SCALE: 3" = 1'-0"

REVISION NO.	SYM.	DESCRIPTION	SHT./OF	DATE	APPROVED

FRED K. ERSKINE LICENSED PROFESSIONAL ARCHITECT No. 10192 HAWAII, U.S.A.

THIS LICENSE EXPIRES APRIL 30, 2024

SIGNATURE

THIS WORK WAS PREPARED BY ME OR UNDER MY SUPERVISION AND CONSTRUCTION OF THIS PROJECT WILL BE UNDER MY OBSERVATION. (OBSERVATION OF CONSTRUCTION AS DEFINED IN CHAPTER 16-115 OF THE HAWAII ADMINISTRATIVE RULES, DEPARTMENT OF COMMERCE AND CONSUMER AFFAIRS, ENTITLED PROFESSIONAL ENGINEERS, ARCHITECTS, SURVEYORS AND LANDSCAPE ARCHITECTS).

STATE OF HAWAII
DEPARTMENT OF LAND AND NATURAL RESOURCES
ENGINEERING DIVISION

HAWAII DISTRICT LAND OFFICE
HILO, HAWAI'I

PARTITION TYPES

DESIGNED: KK	SUBMITTED:
DRAWN: KA, TW, WL	DATE: NOVEMBER 2022
CHECKED: FE	SCALE: AS NOTED
APPROVED:	DRAWING NO. A-404
CHIEF ENGINEER	

Carty Chang
E-signed 2022-11-28 04:17PM HST
carty.s.chang@hawaii.gov
State of Hawaii
Chief Engineer

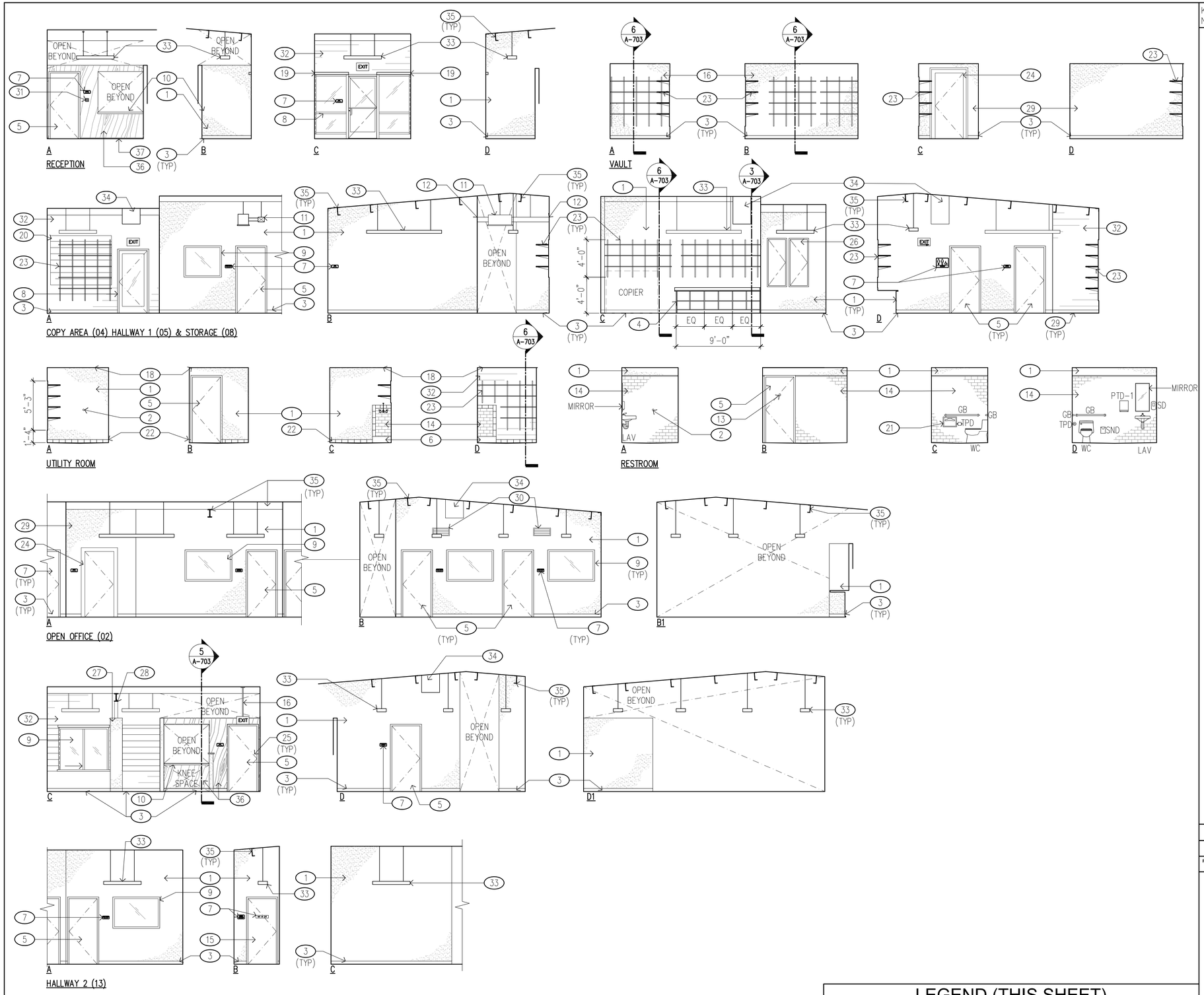

1 INTERIOR ELEVATIONS
SCALE: 3/16" = 1'-0"

NOTE:
SEE T-004 FOR STANDARD FIXTURE MOUNTING HEIGHTS

0 2' 4' 6' 8' 10 12'
SCALE: 3/16" = 1'-0"

LEGEND (THIS SHEET)

CMU WALL | GYP BD PARTITON | CERAMIC TILE WAINSCOT | PLAM PARTITION

KEYNOTES (THIS SHEET)

KEYNOTE NO.	
1	PRIME AND PAINT GYP BD WALL. PT-4
2	DOOR STOP.
3	RUBBER BASE. RB-1
4	BUILT-IN COUNTERTOP, W/CUBBY STORAGE. PL-1 SS-1
5	DOOR AND FRAME, STAIN. ST-1
6	MOP SINK, SEE MECH DRWGS.
7	ADA SIGNAGE, TYP.
8	ALUMINUM STOREFRONT SYSTEM. TR-1
9	GLAZING AS SCHED, TYP.
10	TRANSACTION COUNTER TOP, W/ PLASTIC LAMINATE FACE. PL-1 SS-1
11	FAN COIL UNIT AND DUCT. SEE MECH DRWG.
12	CAULK & SEAL AROUND PENETRATIONS.
13	ROBE HOOK.
14	CERAMIC TILE WAINSCOT, RUNNING BOND. CT-2
15	FIRE RATED METAL DOOR AND FRAME. PRIME AND PAINT. PT-4
16	METAL ROD TO MOUNT EXIT SIGN.
17	NOT USED.
18	PRIME AND PAINT GYP BD CEILING. PT-4
19	MANUAL ROLLER SHADE W/ CONTROL CHAIN.
20	CMU INFILL, SEAL WITH CLEAR MATTE COAT. SE-1
21	TOILET SEAT COVER DISPENSER.
22	CERAMIC TILE WALL BASE. CT-2
23	ADJUSTABLE SHELVING W/ SUPPORTS SPACED 16" O.C. AT STUDS. PL-1
24	PRIME AND PAINT METAL DOOR AND FRAME. PT-4
25	2X WOOD FINISH TRIM. ST-1
26	ELEC PANEL, SEE ELEC DRWG.
27	COLUMN FURRING. PRIME, PAINT, & INSTALL RUBBER BASE ALL SIDES. PT-4
28	EXISTING STEEL STRUCTURE TO REMAIN, PRIME AND PAINT. PT-3
29	PRIME AND PAINT CMU WALL. PT-4
30	SUPPLY AIR REGISTER, SEE MECH DRWG.
31	KEYPAD ACCESS.
32	CMU SEALER. SE-1
33	LIGHT FIXTURE. SEE ELEC DRWG.
34	TUBULAR DAY LIGHTING DEVICE.
35	EXST PURLIN/STRUCTURE TO REMAIN. INFILL W/GYP BD AND SEAL EDGES AT WALL PENETRATIONS. PRIME & PAINT. PT-3
36	PLASTIC LAMINATE FINISH. PL-1
37	3/4" METAL "T" REVEAL. PAINT SURFACE EXPOSED TO CONC W/ASPHALTIC COATING.

REVISION NO.	SYM.	DESCRIPTION	SHT./OF	DATE	APPROVED

FRED K. ERSKINE
LICENSED PROFESSIONAL ARCHITECT
No. 10192
HAWAII, U.S.A.

THIS LICENSE EXPIRES APRIL 30, 2024

SIGNATURE

THIS WORK WAS PREPARED BY ME OR UNDER MY SUPERVISION AND THE INFORMATION TO THIS PROJECT WILL BE UNDER MY OBSERVATION, OBSERVATION OF CONSTRUCTION AS DEFINED IN CHAPTER 16-115 OF THE HAWAII ADMINISTRATIVE RULES, DEPARTMENT OF COMMERCE AND CONSUMER AFFAIRS ENTITLED PROFESSIONAL ENGINEERS, ARCHITECTS, SURVEYORS AND LANDSCAPE ARCHITECTS).

STATE OF HAWAII
DEPARTMENT OF LAND AND NATURAL RESOURCES
ENGINEERING DIVISION

HAWAII DISTRICT LAND OFFICE
HILO, HAWAI'I

INTERIOR ELEVATIONS

DESIGNED: KK	SUBMITTED:
DRAWN: KA, TW, WL	DATE: NOVEMBER 2022
CHECKED: FE	SCALE: AS NOTED
APPROVED:	Carty Chang E-signed 2022-11-28 04:17PM HST carty.s.chang@hawaii.gov State of Hawaii Chief Engineer
CHIEF ENGINEER	

DRAWING NO. A-501

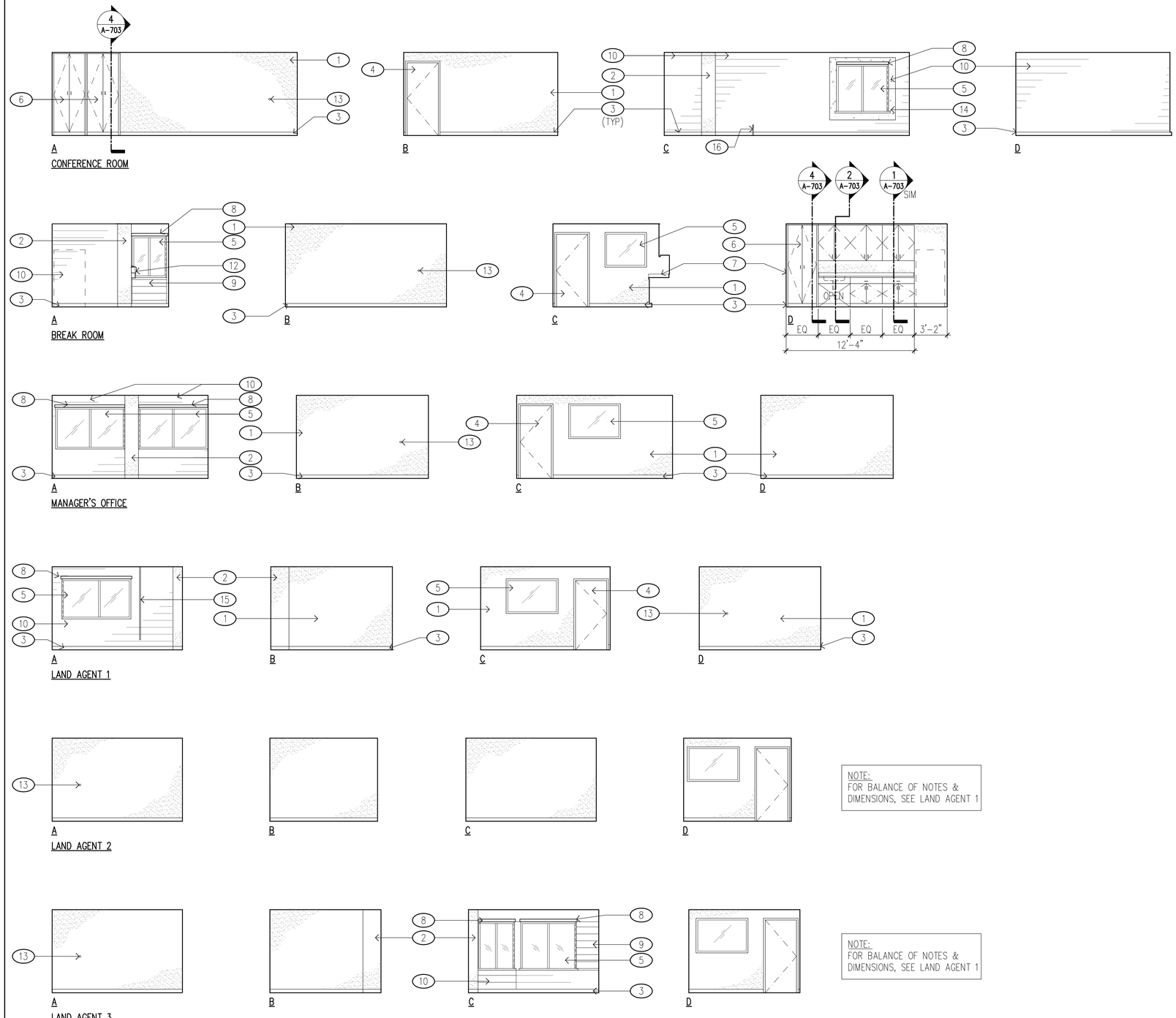

NOTE:
FOR BALANCE OF NOTES & DIMENSIONS, SEE LAND AGENT 1

NOTE:
FOR BALANCE OF NOTES & DIMENSIONS, SEE LAND AGENT 1

1 INTERIOR ELEVATIONS
SCALE: 3/16" = 1'-0"

0 2' 4' 6' 8' 10 12'
SCALE: 3/16" = 1'-0"

KEYNOTES (THIS SHEET)

KEYNOTE NO.	
1	PRIME AND PAINT GYP BD WALL. PT-4
2	COLUMN FURRING. PRIME, PAINT, AND INSTALL RUBBER BASE ALL SIDES. PT-4 RB-1
3	RUBBER BASE. RB-1
4	DOOR AND FRAME PRIME AND PAINT. ST-1
5	GLAZING, TYP.
6	CASEWORK AS SCHED, TYP. PL-1
7	SOLID SURFACE COUNTERTOP, BACKSPLASH, & SIDE SPLASH. SS-1
8	MANUAL ROLLER SHADE W/ CONTROL CHAIN.
9	CMU INFILL WITH CMU SEALER. SE-1
10	CMU SEALER. SE-1
11	NOT USED.
12	FIRE EXTINGUISHER, SEE MECH DRWG.
13	WALL STOP.
14	CAST IN PLACE CONCRETE FRAMING, SEE STRUCT DRWG. SE-1
15	SURFACE MOUNTED WATERLINE OF HOSE BIBB.
16	SURFACE MOUNTED COLD WATER LINE, SEE MECH DRWG.

LEGEND (THIS SHEET)

CMU WALL

GYP BD PARTITON

REVISION NO.	SYM.	DESCRIPTION	SHT./OF	DATE	APPROVED

FRED K. ERSKINE
LICENSED PROFESSIONAL ARCHITECT
No. 10192
HAWAII, U.S.A.

THIS LICENSE EXPIRES APRIL 30, 2024

SIGNATURE

THIS WORK WAS PREPARED BY ME, OR UNDER MY SUPERVISION AND CONSTRUCTION OF THIS PROJECT WILL BE SUPERVISED BY A LICENSED PROFESSIONAL IN CONSTRUCTION AS DEFINED IN CHAPTER 16-115 OF THE HAWAII ADMINISTRATIVE RULES, DEPARTMENT OF COMMERCE AND CONSUMER AFFAIRS ENTITLED PROFESSIONAL ENGINEERS, ARCHITECTS, SURVEYORS AND LANDSCAPE ARCHITECTS).

STATE OF HAWAII
DEPARTMENT OF LAND AND NATURAL RESOURCES
ENGINEERING DIVISION

HAWAII DISTRICT LAND OFFICE
HILO, HAWAI'I

INTERIOR ELEVATIONS

DESIGNED: KK	SUBMITTED:
DRAWN: KA, TW, WL	DATE: NOVEMBER 2022
CHECKED: FE	SCALE: AS NOTED

APPROVED: Carty Chang
E-signed 2022-11-28 04:17PM HST
carty.s.chang@hawaii.gov
State of Hawaii
CHIEF ENGINEER Chief Engineer

DRAWING NO. A-502

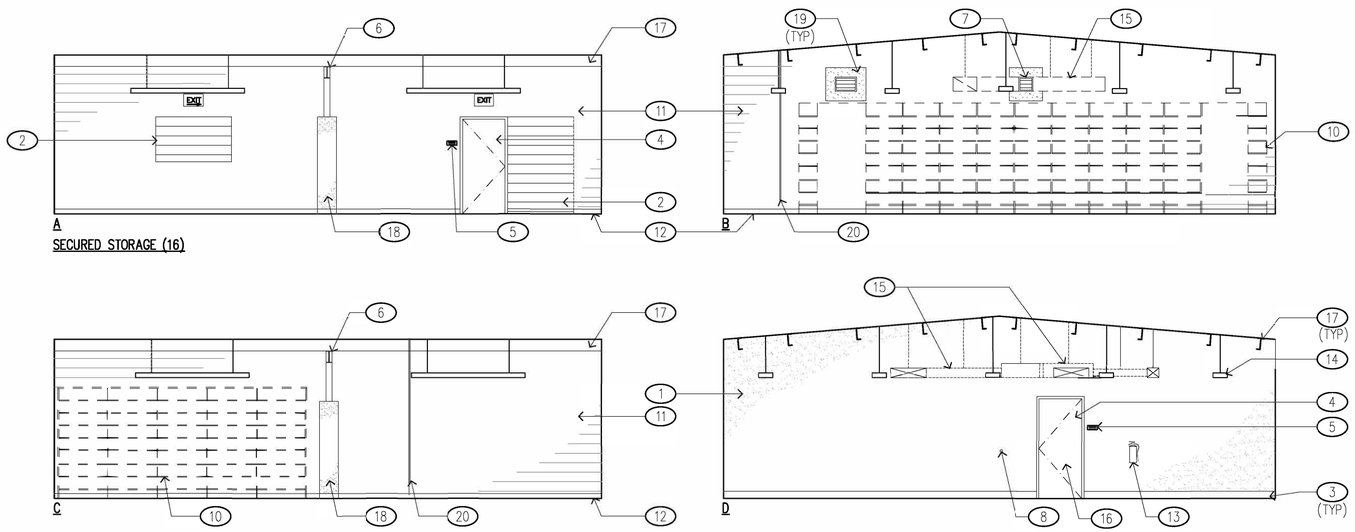

1 INTERIOR ELEVATIONS
SCALE: 3/16" = 1'-0"

0 2' 4' 6' 8' 10 12'
SCALE: 3/16" = 1'-0"

KEYNOTE NO.	KEYNOTES (THIS SHEET)
1	PRIME AND PAINT GYP BD WALL. PT-1
2	CMU INFILL W/ CMU SEALER.
3	RUBBER BASE. RB-1
4	DOOR AND FRAME PRIME AND PAINT. PT-4
5	ADA SIGNAGE, TYP.
6	EXISTING STEEL BEAM. PRIME AND PAINT. PT-3
7	VENTILATION LOUVER, SEE MECH DRWGS. TR-1
8	WALL STOP.
9	CAST IN PLACE CONC FRAME, SEE STRUCT DRWG.
10	ADDITIVE BID NO.3. AREA FOR ELECTRONIC HDS SYSTEM, SEE ELEC DRWG AND SPECIFICATIONS.
11	CMU SEALER.
12	EPOXY RESIN ROLL-UP BASE. SE-2
13	FIRE EXTINGUISHER, SEE MECH DRWG.
14	LIGHT FIXTURE, SEE ELEC DRWGS.
15	HVAC DUCTS & FCU, SEE MECH DRWGS.
16	FIRE RATED DOOR AND FRAME PRIME AND PAINT. PT-4
17	EXST PURLIN TO REMAIN. PRIME & PAINT. PT-3
18	COLUMN FURRING. PRIME, PAINT, AND INSTALL RUBBER BASE ALL SIDES. PT-4 RB-1
19	CAST IN PLACE CONCRETE FRAME, SEE STRUCT DRAWINGS.
20	SURFACE MOUNTED WATERLINE TO HOSE BIBB.

LEGEND (THIS SHEET)

CMU WALL

GYP BD PARTITON

REVISION NO.	SYM.	DESCRIPTION	SHT./OF	DATE	APPROVED

FRED K. ERSKINE
LICENSED PROFESSIONAL ARCHITECT
No. 10192
HAWAII, U.S.A.

THIS LICENSE EXPIRES APRIL 30, 2024

SIGNATURE

THIS WORK WAS PREPARED BY ME OR UNDER MY SUPERVISION AND CONSTRUCTION OF THIS PROJECT WILL BE SUBJECT TO MY PROFESSIONAL SERVICES DURING CONSTRUCTION AS DEFINED IN CHAPTER 16-115 OF THE HAWAII ADMINISTRATIVE RULES, DEPARTMENT OF COMMERCE AND CONSUMER AFFAIRS ENTITLED PROFESSIONAL ENGINEERS, ARCHITECTS, SURVEYORS AND LANDSCAPE ARCHITECTS).

STATE OF HAWAII
DEPARTMENT OF LAND AND NATURAL RESOURCES
ENGINEERING DIVISION

HAWAII DISTRICT LAND OFFICE
HILO, HAWAI'I

INTERIOR ELEVATIONS

DESIGNED: KK	SUBMITTED:
DRAWN: KA, TW, WL	DATE: NOVEMBER 2022
CHECKED: FE	SCALE: AS NOTED
APPROVED: Carty Chang E-signed 2022-11-28 04:17PM HST carty.s.chang@hawaii.gov State of Hawaii Chief Engineer	DRAWING NO. A-503
CHIEF ENGINEER	

DOOR SCHEDULE

OPENING MARK	ROOM NO	ROOM NAME	DR TYPE	DOOR SIZE W (IN)	H (IN)	THK (IN)	CONSTRUCTION/FINISH MAT (NOTE 1)	GLAZ/LVR (NOTE 2)	FRAME (NOTE 3)	FINISH (NOTE 4)	FIRE RATING (MIN)	HDWR GROUP (NOTE 5)	DOOR DETAILS – SEE SHT A-701 (UON) HEAD	JAMB	THRESH	LOUVER	REMARKS
1	05	HALLWAY 1	B	36	80	1.75	AL	GL-1	--	DK BZ	--	--	2/A-702	10/A-702	14/A-702	--	KEYPAD ACCESS, HDWR BY MFR
2	16	SECURED STORAGE	A	36	80	1.75	HM	--	2 / MET	PT	--	3	2	2	8	--	KEYPAD ACCESS
3	01	RECEPTION	C	36	80	1.75	AL	GL-1	--	DK BZ	--	--	2/A-702	6/A-702	14/A-702	--	HDWR BY MFR
4	02	OPEN OFFICE	A	36	84	1.75	SC WD	--	1 / WD	ST	--	4	4	3	7	--	KEYPAD ACCESS
5	03	CONFERENCE ROOM	A	36	84	1.75	SC WD	--	1 / WD	ST	--	5	3	3	7	--	
6	06	RESTROOM	A	36	84	1.75	SC WD	--	1 / WD	ST	--	10	3	3	8	--	KICKPLATE
7	07	UTILITY ROOM	A	36	84	1.75	SC WD	--	1 / WD	ST	--	7	3	3	9	--	KICKPLATE
8	09	BREAK ROOM	A	36	84	1.75	SC WD	--	1 / WD	ST	--	6	3	3	7	--	
9	--	NOT USED	--	--	--	--	--	--	--	--	--	--	--	--	--	--	
10	11	MANAGER'S OFFICE	A	36	84	1.75	SC WD	--	1 / WD	ST	--	8	3	3	7	--	
11	12	LAND AGENT 1	A	36	84	1.75	SC WD	--	1 / WD	ST	--	8	3	3	7	--	
12	13	HALLWAY 2	A	36	84	1.75	HM	--	1 / MET	PT	45	9	1	5	9	--	
13	14	LAND AGENT 2	A	36	84	1.75	SC WD	--	1 / WD	ST	--	8	3	3	7	--	
14	15	LAND AGENT 3	A	36	84	1.75	SC WD	--	1 / WD	ST	--	8	3	3	7	--	

NOTES:
1. SIZES INDICATED ARE FOR DESIGN REFERENCE. CONTRACTOR SHALL VERIFY ON-SITE CONDITION DIMENSIONS TO DETERMINE ACTUAL SIZES TO BE ORDERED. CONFIRM FINAL SIZES W/ ARCHITECT BEFORE ORDERING.
2. PROVIDE ADAAG COMPLIANT HARDWARE ON ALL DOORS. OPERATING DEVICES ON DOORS SHALL HAVE A SHAPE THAT IS EASY TO GRASP W/ ONE HAND & DOES NOT REQUIRE TIGHT GRASPING, TIGHT PINCHING, OR TWISTING OF THE WRIST TO OPERATE.
3. ALL GLASS IN DOORS SHALL BE SAFETY DESIGNATED.
4. REFER TO EXTERIOR & INTERIOR ELEVATIONS FOR DOOR TYPE CONFIGURATIONS.

DOOR NOTES

ABBREVIATIONS

--	NONE OR NOT APPLICABLE
DR NO.	DOOR NUMBER, SEE FLOOR PLAN SHEET A-201
TYPE	SEE DOOR TYPES SCHEDULE
W	DOOR WIDTH
H	DOOR HEIGHT
THK	DOOR PANEL THICKNESS
MAT	MATERIAL (SEE DOOR NOTE 1)
GLZ	GLAZING TYPE (SEE DOOR NOTE 2)
LVR	LOUVER TYPE (SEE DOOR NOTE 2)
FRAME	DOOR FRAME (SEE DOOR NOTE 3)
HDWE	HARDWARE 'GROUP NO.' (SEE DOOR NOTE 4)
EXST	EXISTING (SEE REMARKS FOR WORK)

1. DOOR CONSTRUCTION

AL	ALUMINUM
HM	HOLLOW METAL
SC WD	SOLID CORE WOOD

2. GLAZING/LOUVER CONSTRUCTION

GL-X	SEE SPEC SECTION 08800
INSUL	INSULATED GLAZING
LAM	LAMINATED GLASS
LE	LOW 'E' ENERGY GLAZING
TG	TEMPERED GLASS

3. FRAME CONSTRUCTION

AL	ALUMINUM
MTL	METAL
WD	WOOD

4. FINISHES

DK BZ	DARK BRONZE
PT	PAINTED
ST	STAINED

5. HDWR GROUP NO. (SEE HDWR GROUP NO.)

6. SEE PRODUCT DATA PACKAGE FOR DOOR & FRAME DETAILS

IECC 2015 NOTE:

FOR EXTERIOR METAL DOOR
U-FACTOR = 0.61 MAXIMUM

FOR STOREFRONT ENTRY DOORS:
U-FACTOR = 0.63 MAXIMUM

FOR EXTERIOR GLAZING:
U-FACTOR = 0.28
SHGC = 0.27

FOR EXTERIOR WINDOWS:
PROJECTION FACTOR = 0.98 (WEST) & 0.85 (EAST)

WINDOW & LOUVER SCHEDULE

WINDOW NO.	TYPE	WINDOW SIZE W (INCH)	H (INCH)	SILL HT (INCH)	CONSTRUCTION/FINISH GLAZ/LVR (NOTE 1)	FRAME (NOTE 2)	FINISH (NOTE 3)	FIRE RATING (MIN)	WINDOW DETAILS (SEE SHT A-701) HEAD	JAMB	MULLION	SILL	REMARKS
1	B	60	56	26	GL-2	AL	DK BZ	--	3 (SIM)	7 (SIM)	7 (SIM)	11 (SIM)	INSECT SCREEN, SEE NOTES 4 & 5
2	B	40	48	34	GL-2	AL	DK BZ	--	3	7	7	11	INSECT SCREEN, SEE NOTE 4
3	B	80	48	34	GL-2	AL	DK BZ	--	3	7	7	11	INSECT SCREEN, SEE NOTE 4
4	B	80	48	34	GL-2	AL	DK BZ	--	3	7	7	11	INSECT SCREEN, SEE NOTE 4
5	B	80	48	34	GL-2	AL	DK BZ	--	3	7	7	11	INSECT SCREEN, SEE NOTE 4
6	B	42	56	26	GL-2	AL	DK BZ	--	3	7	7	11	INSECT SCREEN, SEE NOTE 4
7	B	64	56	26	GL-2	AL	DK BZ	--	3	7	7	11	INSECT SCREEN, SEE NOTE 4
8	B	64	56	26	GL-2	AL	DK BZ	--	3	7	7	11	INSECT SCREEN, SEE NOTE 4
9	A	60	40	46	GL-3	WD	ST	--	15	15	--	15	
10	A	60	40	46	GL-3	WD	ST	--	15	15	--	15	
11	A	60	40	46	GL-3	WD	ST	--	15	15	--	15	
12	A	60	40	46	GL-3	WD	ST	--	15	15	--	15	
13	A	60	40	46	GL-3	WD	ST	--	15	15	--	15	
L1	L	18	12	96	AL	AL	DK BZ	--	4	8	--	12	INSECT SCREEN & BIRD SCREEN, SEE NOTE 5
L2	L	12	12	96	AL	AL	DK BZ	--	4	8	--	12	INSECT SCREEN & BIRD SCREEN, SEE NOTE 5

NOTES:
1. PROVIDE EXTERIOR FIBERGLASS SAFETY SCREENS (TYP. FOR ALL EXTERIOR WINDOWS).
2. SEE EXTERIOR & INTERIOR ELEVATIONS FOR WINDOW TYPE CONFIGURATIONS.
3. SIZES INDICATED ARE FOR DESIGN REFERENCE. CONTRACTOR SHALL VERIFY ON-SITE CONDITION DIMENSIONS TO DETERMINE ACTUAL SIZES TO BE ORDERED. CONFIRM FINAL SIZES W/ ARCHITECT BEFORE ORDERING.
4. REFER TO EXTERIOR ELEVATIONS ON SHEET A-301 FOR THE LOCATION OF OPERABLE SLIDING PANEL AT EXTERIOR WINDOWS.
5. SEE STRUCTURAL DRAWINGS FOR CAST IN PLACE CONC FRAME.

WINDOW NOTES

ABBREVIATIONS

--	NONE OR NOT APPLICABLE
WINDOW NO.	WINDOW NUMBER, SEE FLOOR PLAN SHEET A-201
TYPE	SEE WINDOW TYPES SCHEDULE
W	WINDOW WIDTH
H	WINDOW HEIGHT
GLZ	GLAZING TYPE (SEE WINDOW NOTE 1)
LVR	LOUVER TYPE (SEE WINDOW NOTE 1)

1. GLAZING/LOUVER CONSTRUCTION
SEE SPEC SECTION 08800.

AL	ALUMINUM
INSUL	INSULATED GLAZING
LAM	LAMINATED GLASS
LE	LOW 'E' ENERGY GLAZING
TG	TEMPERED GLASS

2. FRAME CONSTRUCTION

AL	ALUMINUM
WD	WOOD

3. FINISHES

DK AN	DARK ANODIZED
PT	PAINTED

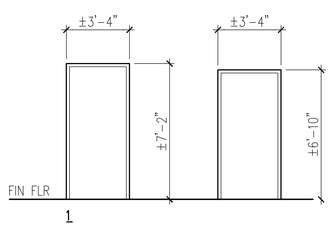

1 DOOR FRAME TYPES
SCALE: NOT TO SCALE

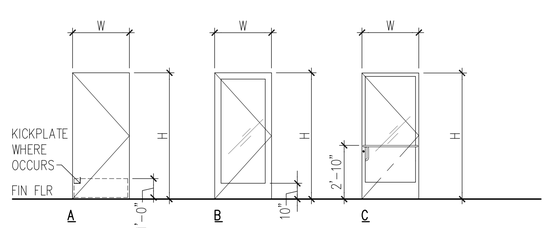

2 DOOR TYPES
SCALE: NOT TO SCALE

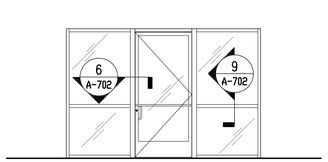

3 STOREFRONT
SCALE: NOT TO SCALE

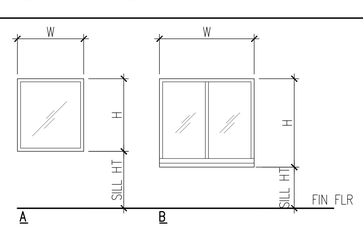

4 WINDOW TYPES
SCALE: NOT TO SCALE

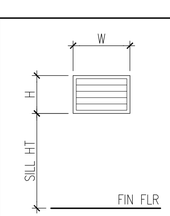

5 LOUVER TYPE
SCALE: NOT TO SCALE

REVISION NO.	SYM.	DESCRIPTION	SHT./OF	DATE	APPROVED

FRED K. ERSKINE
LICENSED PROFESSIONAL ARCHITECT
No. 10192
HAWAII, U.S.A.

THIS LICENSE EXPIRES APRIL 30, 2024

SIGNATURE

THIS WORK WAS PREPARED BY ME, OR UNDER MY SUPERVISION AND CONSTRUCTION OF THIS PROJECT WILL BE UNDER MY OBSERVATION. (OBSERVATION OF CONSTRUCTION AS DEFINED IN CHAPTER 16-115 OF THE HAWAII ADMINISTRATIVE RULES, DEPARTMENT OF COMMERCE AND CONSUMER AFFAIRS, REGULATED PROFESSIONAL ENGINEERS, ARCHITECTS, SURVEYORS AND LANDSCAPE ARCHITECTS).

STATE OF HAWAII
DEPARTMENT OF LAND AND NATURAL RESOURCES
ENGINEERING DIVISION

HAWAII DISTRICT LAND OFFICE
HILO, HAWAI'I

DOOR AND WINDOW SCHEDULE

DESIGNED: KK	SUBMITTED:
DRAWN: KA, TW, WL	DATE: NOVEMBER 2022
CHECKED: FE	SCALE: AS NOTED
APPROVED:	DRAWING NO. A-601
CHIEF ENGINEER	

Carty Chang
E-signed 2022-11-28 04:17PM HST
carty.s.chang@hawaii.gov
State of Hawaii
Chief Engineer

SIGNAGE SCHEDULE

NO.	SIGN MTG.	SIGN TYPE	SIGN TEXT	REMARKS
1	B	A	ENTRY	1 LINE OF TEXT
2	D	A	EXIT	1 LINE OF TEXT
3	A	A	SECURED STORAGE NOT AN EXIT	3 LINES OF TEXT
4	B	A	EXIT	1 LINE OF TEXT
5	A	A	ENTRY	1 LINE OF TEXT
6	B	A	EXIT	1 LINE OF TEXT
7	B	A	OFFICE	1 LINE OF TEXT
8	A	A	EXIT	1 LINE OF TEXT
9	A	A	CONFERENCE ROOM	2 LINES OF TEXT
10	C	B	RESTROOM	1 LINE OF TEXT
11	B	A	UTILITY	1 LINE OF TEXT
12	B	A	BREAK ROOM	1 LINE OF TEXT
13	B	A	VAULT	1 LINE OF TEXT
14	B	A	DISTRICT LAND AGENT	2 LINES OF TEXT
15	A	A	LAND AGENT	1 LINE OF TEXT
16	B	A	SECURED STORAGE	2 LINES OF TEXT
17	A	A	OFFICE	1 LINE OF TEXT
18	A	A	LAND AGENT	1 LINE OF TEXT
19	A	A	LAND AGENT	1 LINE OF TEXT
20	E	C	NOT AN EXIT	1 LINE OF TEXT

FINISH SCHEDULE

KEY	DESCRIPTION	MANUFACTURER	COLOR NO.	NAME	PATTERN/STYLE/FINISH	REMARKS
VT-1	VINYL COMPOSITION TILE	ARMSTRONG FLOORING	Z1911	CLASSIC WHITE	STANDARD EXCELON IMPERIAL TEXTURE	W/DIAMOND 10 TECHNOLOGY COATING
VT-2	VINYL COMPOSITION TILE	ARMSTONG FLOORING	Z3547	HALL	BIO-FLOORING MIGRATIONS BBT	W/DIAMOND 10 TECHNOLOGY COATING
CT-1	CERAMIC FLOOR TILE	DALTILE	D014	DESERT GRAY	2" HEXAGON MOSAIC	
CT-2	CERAMIC WALL TILE	DALTILE	K175	BISCUIT	3x6 WALL/RITTENHOUSE SQUARE	RUNNING BOND PATTERN
GR-1	FLOOR TILE GROUT	MAPEI	2	PEWTER		
GR-2	WALL TILE GROUT	MAPEI	14	BISCUIT		
RB-1	RUBBER BASE	TARKETT (JOHNSONITE)	27	MIST WG	TRADITIONAL WALL BASE	
PL-1	PLASTIC LAMINATE	FORMICA	8906-58	DANISH MAPLE	MATTE FINISH	
PT-1	EXTERIOR PAINT	SHERWIN WILLIAMS	SW 9110	MALABAR		EXT CMU WALL – FIELD
PT-2	EXTERIOR PAINT	SHERWIN WILLIAMS	SW 9112	SONG THRUSH		EXT DEFS WALL – ENTRANCE
PT-3	INTERIOR PAINT	SHERWIN WILLIAMS	SW 6993	BLACK OF NIGHT		INT STRUCTURE – RIGID FRAMING, PURLINS, DIAGONAL RODS, ANGLE LEDGER
PT-4	INTERIOR PAINT	SHERWIN WILLIAMS	SW 7628	WINDFRESH WHITE		INT WALLS– FIELD, CEILING
ST-1	STAIN	TBD	TBD	TBD	CLEAR MATTE	INTERIOR DOORS, FRAMES, WOOD TRIM
SE-1	WATER REPELLENT COATING	DIEDRICH TECHNOLOGIES	303S	SILOXSEAL SERIES	CLEAR MATTE	INTERIOR CMU WALL
SE-2	EPOXY FLOORING	SIKAFLOR		OXFORD GRAY	COMFORTFLOR	WAREHOUSE AND UTILITY ROOM FLOOR
SS-1	SOLID SURFACE	LG HAUSYS	R542	HARMONY	HI-MACS	COUNTERTOP SURFACES
TR-1	METAL FINISH	KYNAR 500	SR 27	DARK BRONZE	STANDARD	EXT METAL – AWNINGS, FLASHING, FRAMES, DOWNSPOUTS

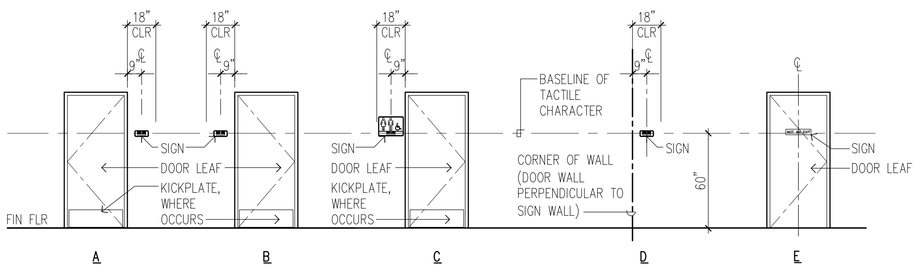

1 SIGN MOUNTING KEY

SCALE: 1/4"=1'-0"

0 2' 4' 8'
SCALE: 1/4" = 1'-0"

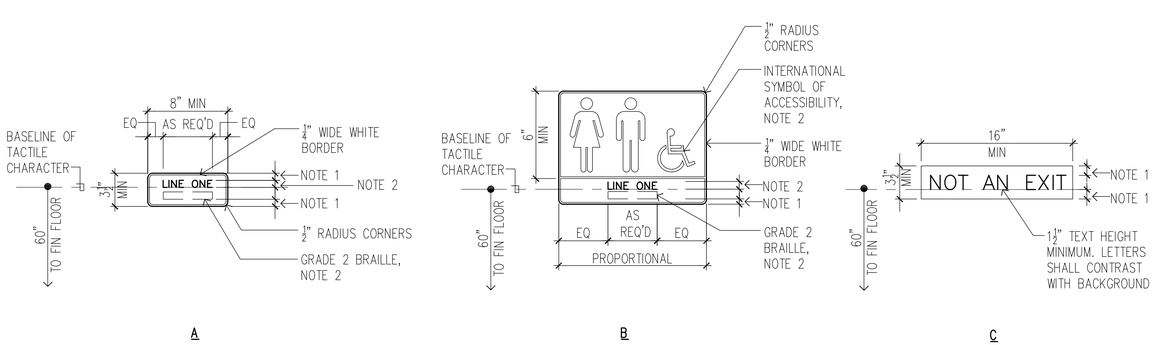

2 SIGN TYPES

SCALE: NOT TO SCALE

NOTES:

1. DIMENSION FROM TOP & BOTTOM OF TEXT TO SIGN EDGE SHALL BE 3/4".
2. TEXT, BRAILLE & PICTORIAL SYMBOL SHALL COMPLY WITH THE 2010 ADA STANDARDS FOR ACCESSIBLE DESIGN, SECTION 703.
3. IF SIGN LENGTH EXCEEDS AVAILABLE WALL WIDTH, TEXT SHALL BE PLACED ON TWO OR MORE LINES, AS REQ'D.
4. DIMENSION FROM TOP & BOTTOM OF TEXT TO SIGN EDGE SHALL BE 1".
5. CONTRACTOR SHALL SUBMIT SIGNAGE SCHEDULE, SHOP DRAWINGS, & SAMPLES OF EACH SIGN TYPE FOR ARCHITECT REVIEW/APPROVAL BEFORE THE SIGNS ARE ORDERED/FABRICATED.

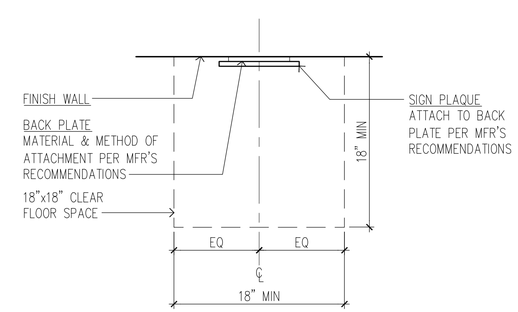

NOTES:

1. CONTRACTOR SHALL VERIFY SIZE OF PROPOSED SIGN W/ MOUNTING LOCATION SHOWN & NOTIFY ARCHITECT PRIOR TO SIGN FABRICATION OF ANY SIGN THAT EXCEED THE AVAILABLE WALL SPACE.
2. WHERE GLAZING OCCURS, CONTRACTOR SHALL MOUNT SIGN ACCORDING TO SIGN MANUFACTURER'S INSTRUCTIONS.

3 MOUNTING DETAIL

SCALE: NOT TO SCALE

REVISION NO.	SYM.	DESCRIPTION	SHT.-OF	DATE	APPROVED

FRED K. ERSKINE
LICENSED PROFESSIONAL ARCHITECT
No. 10192
HAWAII, U.S.A.

THIS LICENSE EXPIRES APRIL 30, 2024

SIGNATURE

THIS WORK WAS PREPARED BY ME OR UNDER MY SUPERVISION AND CONSTRUCTION OF THIS PROJECT WILL BE UNDER MY OBSERVATION. (OBSERVATION OF CONSTRUCTION IS NOT A GUARANTEE OF PERFECT WORK). THE HAWAII ADMINISTRATIVE RULES, DEPARTMENT OF COMMERCE AND CONSUMER AFFAIRS ENTITLED PROFESSIONAL ENGINEERS, ARCHITECTS, SURVEYORS AND LANDSCAPE ARCHITECTS).

STATE OF HAWAII
DEPARTMENT OF LAND AND NATURAL RESOURCES
ENGINEERING DIVISION

HAWAII DISTRICT LAND OFFICE
HILO, HAWAI'I

SIGNAGE SCHEDULES & DETAILS

DESIGNED: KK	SUBMITTED:
DRAWN: KA, TW, WL	DATE: NOVEMBER 2022
CHECKED: FE	SCALE: AS NOTED
APPROVED:	DRAWING NO. A-602
CHIEF ENGINEER	

Carty Chang
E-signed 2022-11-28 04:17PM HST
carty.s.chang@hawaii.gov
State of Hawaii
Chief Engineer

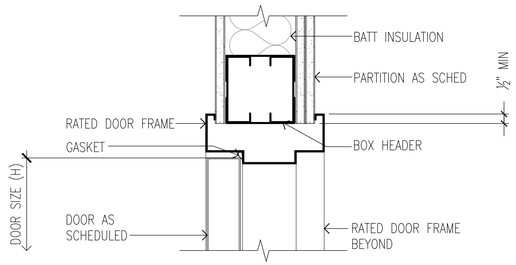

1 RATED WALL HEAD DETAIL
SCALE: 3"=1'-0" GA FILE NO. WP 1021

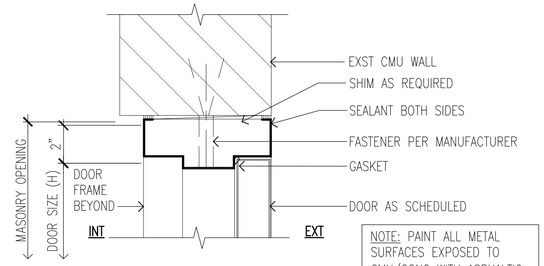

NOTE: PAINT ALL METAL SURFACES EXPOSED TO CMU/CONC WITH ASPHALTIC COATING

2 EXT METAL DOOR HEAD DETAIL (JAMB SIM)
SCALE: 3"=1'-0"

0 3" 6" 9" 1'
SCALE: 3" = 1'-0"

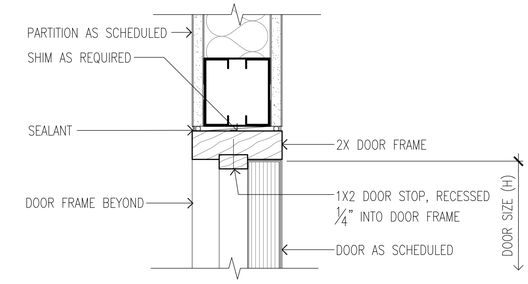

3 TYP INT DOOR HEAD DETAIL (JAMB SIM)
SCALE: 3"=1'-0"

0 3" 6" 9" 1'
SCALE: 3" = 1'-0"

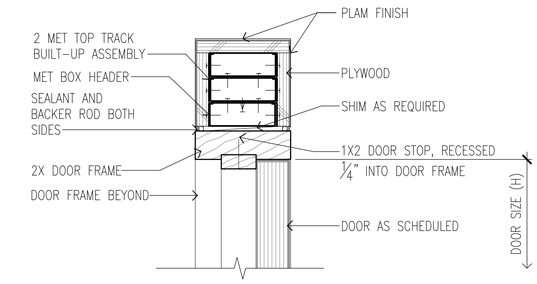

4 RECEPTION DOOR HEAD DETAIL
SCALE: 3"=1'-0"

0 3" 6" 9" 1'
SCALE: 3" = 1'-0"

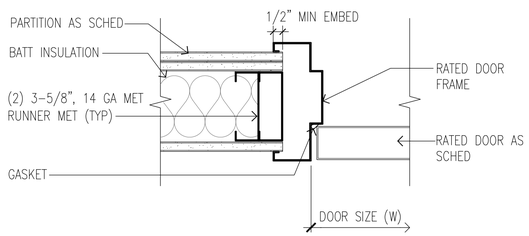

5 RATED WALL JAMB DETAIL
SCALE: 3"=1'-0" GA FILE NO. WP 1021

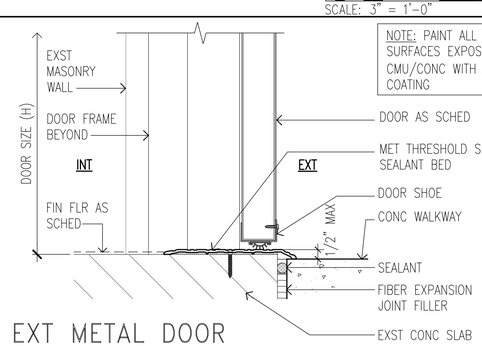

NOTE: PAINT ALL METAL SURFACES EXPOSED TO CMU/CONC WITH ASPHALTIC COATING

6 EXT METAL DOOR THRESHOLD DETAIL
SCALE: 3"=1'-0"

0 3" 6" 9" 1'
SCALE: 3" = 1'-0"

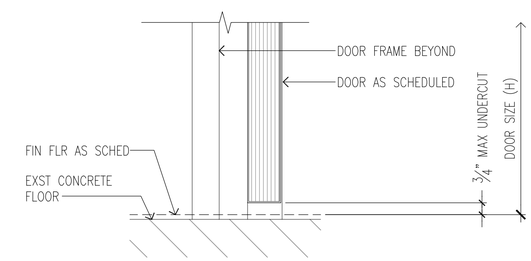

7 VINYL TILE TO VINYL TILE THRESHOLD DETAIL
SCALE: 3"=1'-0"

0 3" 6" 9" 1'
SCALE: 3" = 1'-0"

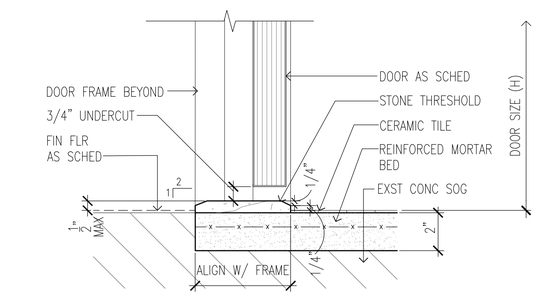

8 VINYL TILE TO CERAMIC TILE THRESHOLD DETAIL
SCALE: 3" = 1'-0"

0 3" 6" 9" 1'
SCALE: 3" = 1'-0"

NOTE: PAINT ALL METAL SURFACES EXPOSED TO CMU/CONC WITH ASPHALTIC COATING

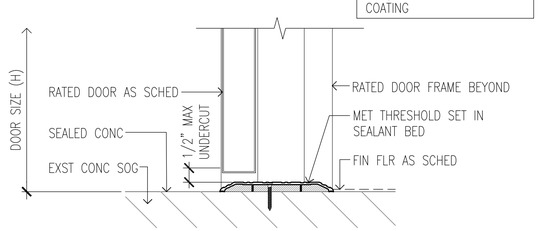

9 VINYL TO RESIN FLOOR THRESHOLD DETAIL
SCALE: 3" = 1'-0" UL DESIGN 419

0 3" 6" 9" 1'
SCALE: 3" = 1'-0"

REVISION NO.	SYM.	DESCRIPTION	SHT./OF	DATE	APPROVED

FRED K. ERSKINE
LICENSED PROFESSIONAL ARCHITECT
No. 10192
HAWAII, U.S.A.

THIS LICENSE EXPIRES APRIL 30, 2024

SIGNATURE

THIS WORK WAS PREPARED BY ME OR UNDER MY SUPERVISION AND CONSTRUCTION OF THIS PROJECT WILL BE UNDER MY OBSERVATION. (OBSERVATION OF CONSTRUCTION AS DEFINED IN CHAPTER 16-115 OF THE RULES OF THE DEPT. OF CONSUMER AFFAIRS, DEPT. OF COMMERCE AND CONSUMER AFFAIRS ENTITLED PROFESSIONAL ENGINEERS, ARCHITECTS, SURVEYORS AND LANDSCAPE ARCHITECTS).

STATE OF HAWAII
DEPARTMENT OF LAND AND NATURAL RESOURCES
ENGINEERING DIVISION

HAWAII DISTRICT LAND OFFICE
HILO, HAWAI'I

DOOR DETAILS

DESIGNED: KK	SUBMITTED:
DRAWN: KA, TW, WL	DATE: NOVEMBER 2022
CHECKED: FE	SCALE: AS NOTED
APPROVED: CHIEF ENGINEER	DRAWING NO. A-701

Carty Chang
E-signed 2022-11-28 04:17PM HST
carty.s.chang@hawaii.gov
State of Hawaii
Chief Engineer

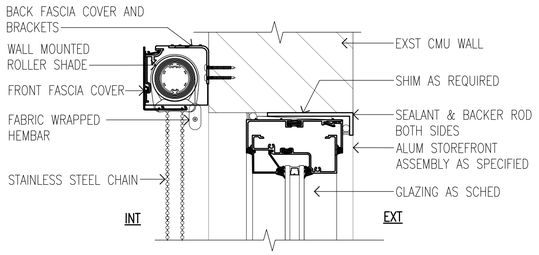

NOTE: PAINT ALL METAL SURFACES EXPOSED TO CMU/CONC WITH ASPHALTIC COATING

1 STOREFRONT GLAZING HEAD DETAIL

SCALE: 3"=1'-0"

0 3" 6" 9" 1'
SCALE: 3" = 1'-0"

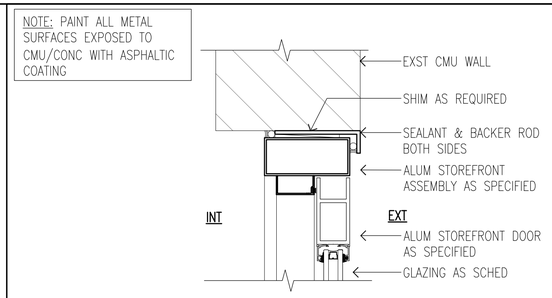

NOTE: PAINT ALL METAL SURFACES EXPOSED TO CMU/CONC WITH ASPHALTIC COATING

2 STOREFRONT DOOR HEAD DETAIL (EXT ALUM DR SIM)

SCALE: 3"=1'-0"

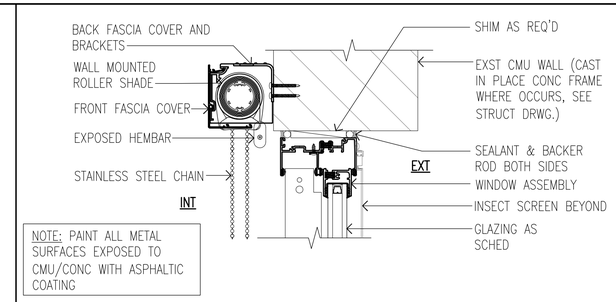

NOTE: PAINT ALL METAL SURFACES EXPOSED TO CMU/CONC WITH ASPHALTIC COATING

3 EXT WINDOW FIXED LEAF HEAD DETAIL (OPERABLE SIM)

SCALE: 3" = 1'-0"

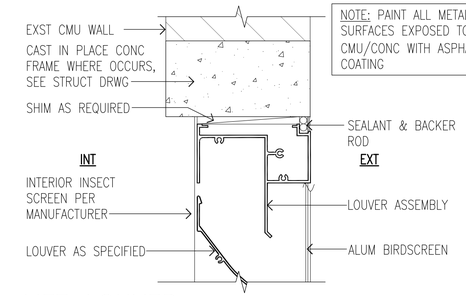

NOTE: PAINT ALL METAL SURFACES EXPOSED TO CMU/CONC WITH ASPHALTIC COATING

4 MET LOUVER HEAD DETAIL

SCALE: 3"=1'-0"

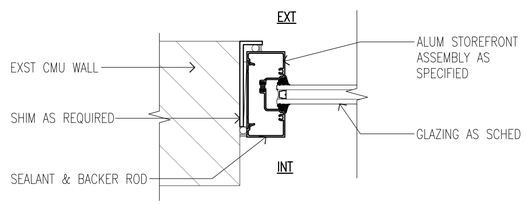

NOTE: PAINT ALL METAL SURFACES EXPOSED TO CMU/CONC WITH ASPHALTIC COATING

5 STOREFRONT GLAZING JAMB DETAIL

SCALE: 3"=1'-0"

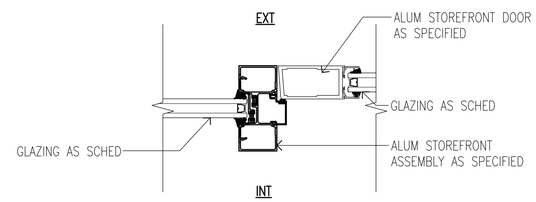

6 STOREFRONT DOOR JAMB DETAIL

SCALE: 3"=1'-0"

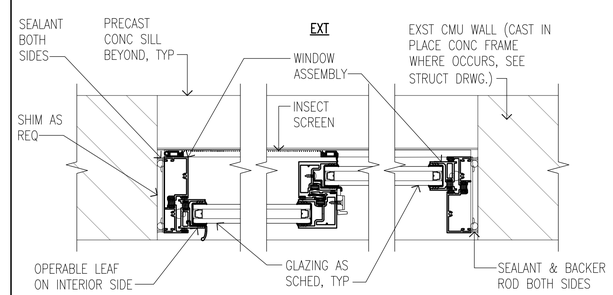

NOTE: PAINT ALL METAL SURFACES EXPOSED TO CMU/CONC WITH ASPHALTIC COATING

7 EXT WINDOW JAMB DETAIL

SCALE: 3" = 1'-0"

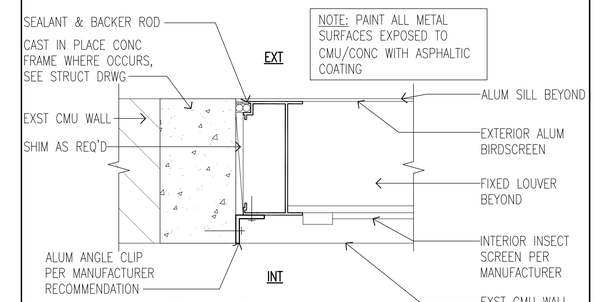

NOTE: PAINT ALL METAL SURFACES EXPOSED TO CMU/CONC WITH ASPHALTIC COATING

8 MET LOUVER JAMB DETAIL

SCALE: 3"=1'-0"

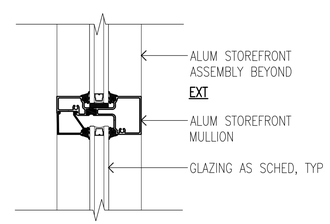

9 STOREFRONT GLAZING HORIZONTAL MULLION DETAIL

SCALE: 3"=1'-0"

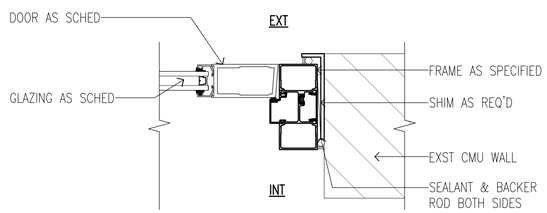

NOTE: PAINT ALL METAL SURFACES EXPOSED TO CMU/CONC WITH ASPHALTIC COATING

10 EXT ALUMINUM DOOR JAMB DETAIL

SCALE: 3"=1'-0"

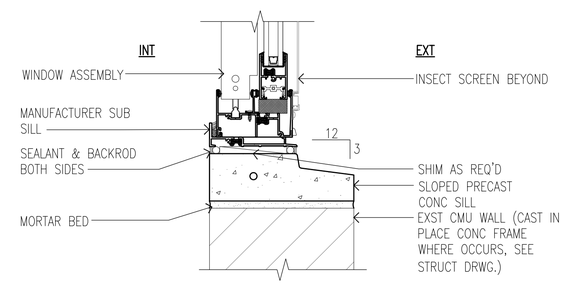

NOTE: PAINT ALL METAL SURFACES EXPOSED TO CMU/CONC WITH ASPHALTIC COATING

11 EXT WINDOW FIXED LEAF SILL DETAIL (OPERABLE SIM)

SCALE: 3" = 1'-0"

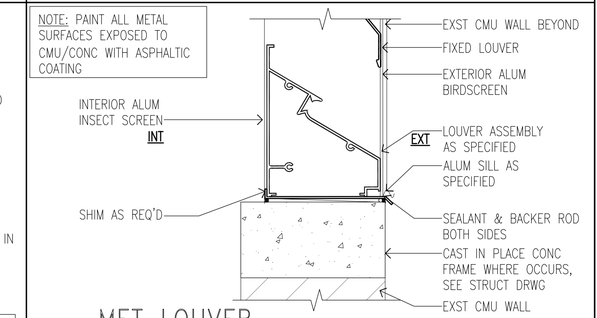

NOTE: PAINT ALL METAL SURFACES EXPOSED TO CMU/CONC WITH ASPHALTIC COATING

12 MET LOUVER SILL DETAIL

SCALE: 3"=1'-0"

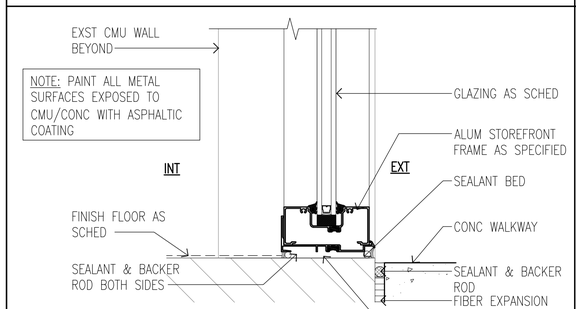

NOTE: PAINT ALL METAL SURFACES EXPOSED TO CMU/CONC WITH ASPHALTIC COATING

13 STOREFRONT GLAZING SILL DETAIL

SCALE: 3"=1'-0"

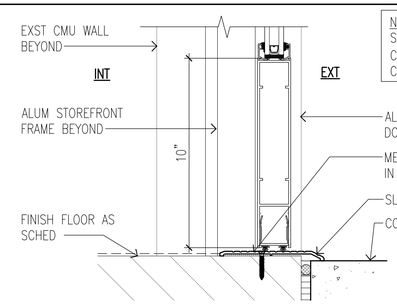

NOTE: PAINT ALL METAL SURFACES EXPOSED TO CMU/CONC WITH ASPHALTIC COATING

14 STOREFRONT DOOR THRESHOLD DETAIL (EXT ALUM DR SIM)

SCALE: 3"=1'-0"

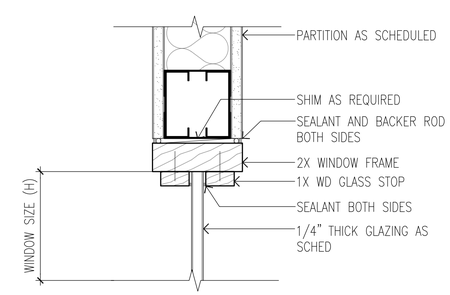

15 TYP INT WINDOW HEAD DETAIL (JAMB/SILL SIM)

SCALE: 3"=1'-0"

REVISION NO.	SYM.	DESCRIPTION	SHT./OF	DATE	APPROVED

FRED K. ERSKINE
LICENSED PROFESSIONAL ARCHITECT
No. 10192
HAWAII, U.S.A.

THIS LICENSE EXPIRES APRIL 30, 2024

SIGNATURE

THIS WORK WAS PREPARED BY ME OR UNDER MY SUPERVISION AND CONSTRUCTION OF THIS PROJECT WILL BE UNDER MY OBSERVATION. (OBSERVATION OF CONSTRUCTION AS DEFINED IN CHAPTER 16-115 OF THE RULES OF PROFESSIONAL ENGINEERS, ARCHITECTS, LANDSCAPE ARCHITECTS, DEPARTMENT OF COMMERCE AND CONSUMER AFFAIRS ENTITLED PROFESSIONAL ENGINEERS, ARCHITECTS, SURVEYORS AND LANDSCAPE ARCHITECTS).

STATE OF HAWAII
DEPARTMENT OF LAND AND NATURAL RESOURCES
ENGINEERING DIVISION

HAWAII DISTRICT LAND OFFICE
HILO, HAWAI'I

WINDOW & STOREFRONT DETAILS

DESIGNED: KK	SUBMITTED:
DRAWN: KA, TW, WL	DATE: NOVEMBER 2022
CHECKED: FE	SCALE: AS NOTED
APPROVED: Carty Chang E-signed 2022-11-28 04:17PM HST carty.s.chang@hawaii.gov State of Hawaii Chief Engineer	DRAWING NO. A-702
CHIEF ENGINEER	

JOB NO. E00BH30A SHEET NO. 41 OF 77 SHEETS

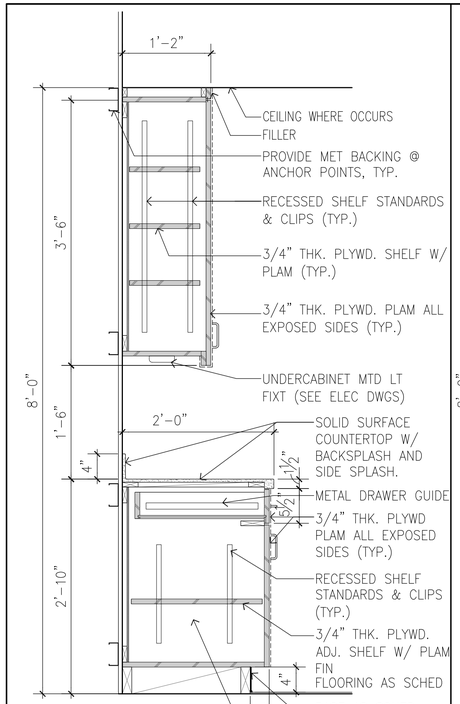

1 STANDARD CASEWORK DETAIL

SCALE: 1" = 1'-0"

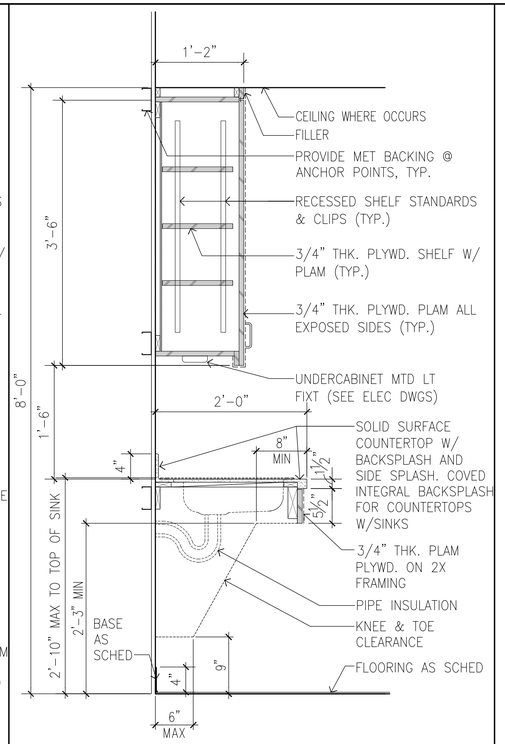

2 CASEWORK DETAIL AT SINK

SCALE: 1" = 1'-0"

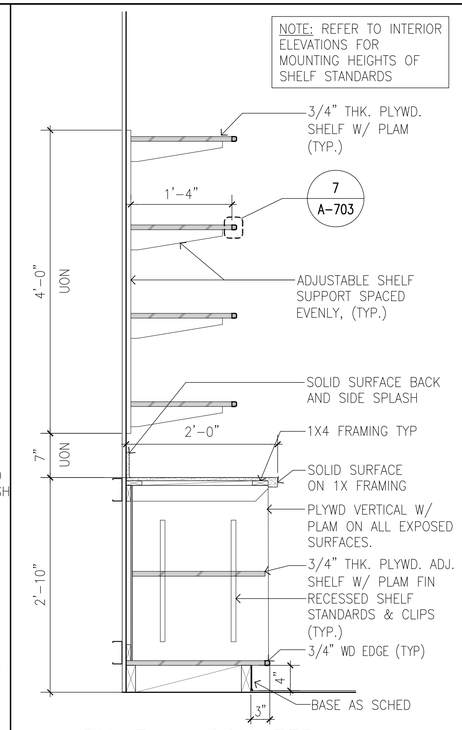

3 BUILT-IN COUNTER AT COPY AREA

SCALE: 1" = 1'-0"

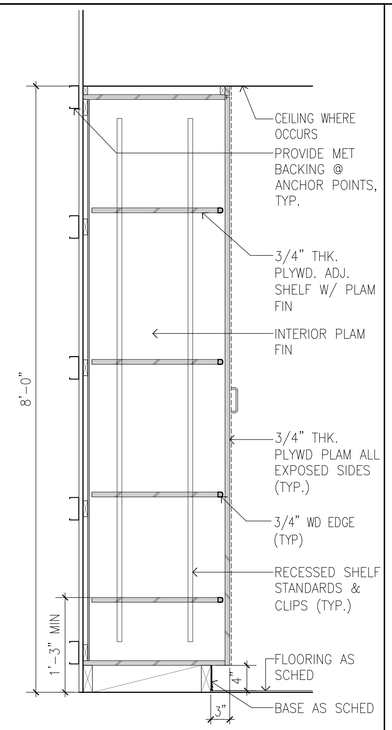

4 STORAGE CLOSET DETAIL

SCALE: 1" = 1'-0"

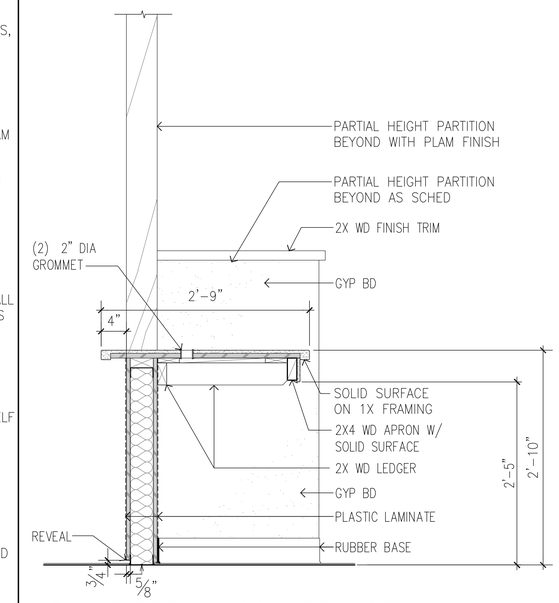

5 RECEPTION COUNTER DETAIL

SCALE: 1" = 1'-0"

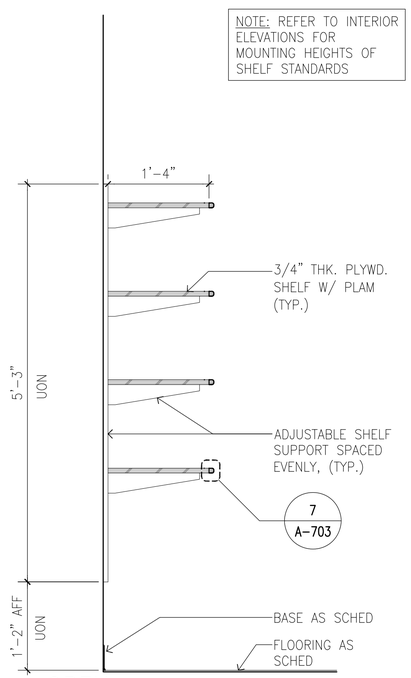

6 OPEN SHELVING DETAIL (TYP)

SCALE: 1" = 1'-0"

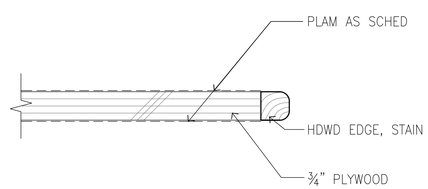

7 OPEN SHELVING EDGE DETAIL

SCALE: 6" = 1'-0"

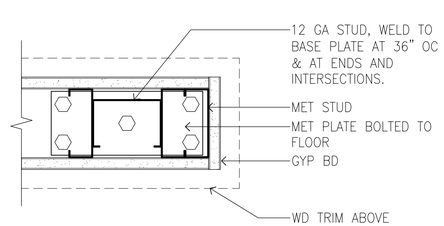

8 POST DETAIL AT PARTIAL WALL

SCALE: 3" = 1'-0"

REVISION NO.	SYM.	DESCRIPTION	SHT./OF	DATE	APPROVED

FRED K. ERSKINE
LICENSED PROFESSIONAL ARCHITECT
No. 10192
HAWAII, U.S.A.

THIS LICENSE EXPIRES APRIL 30, 2024

SIGNATURE

THIS WORK WAS PREPARED BY ME, OR UNDER MY SUPERVISION AND CONSTRUCTION OF THIS PROJECT WILL BE UNDER MY OBSERVATION, (OBSERVATION OF CONSTRUCTION AS DEFINED IN CHAPTER 16-115 OF THE HAWAII ADMINISTRATIVE RULES, DEPARTMENT OF COMMERCE AND CONSUMER AFFAIRS, ENTITLED PROFESSIONAL ENGINEERS, ARCHITECTS, SURVEYORS AND LANDSCAPE ARCHITECTS).

STATE OF HAWAII
DEPARTMENT OF LAND AND NATURAL RESOURCES
ENGINEERING DIVISION

HAWAII DISTRICT LAND OFFICE
HILO, HAWAI'I

CASEWORK DETAILS

DESIGNED: KK	SUBMITTED:
DRAWN: KA, TW, WL	DATE: NOVEMBER 2022
CHECKED: FE	SCALE: AS NOTED
APPROVED:	DRAWING NO. A-703
CHIEF ENGINEER	

Carty Chang
E-signed 2022-11-28 04:17PM HST
carty.s.chang@hawaii.gov
State of Hawaii
Chief Engineer

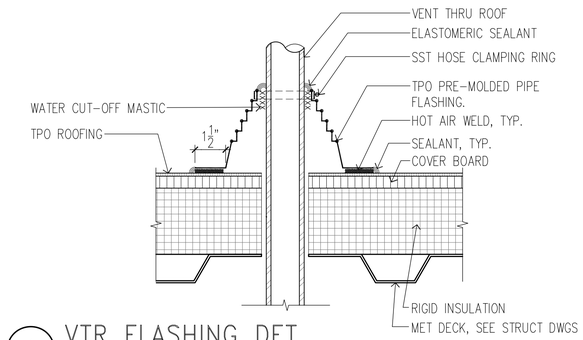

1 VTR FLASHING DET
SCALE: 3" = 1'-0"
0 3" 6" 9" 1'
SCALE: 3" = 1'-0"

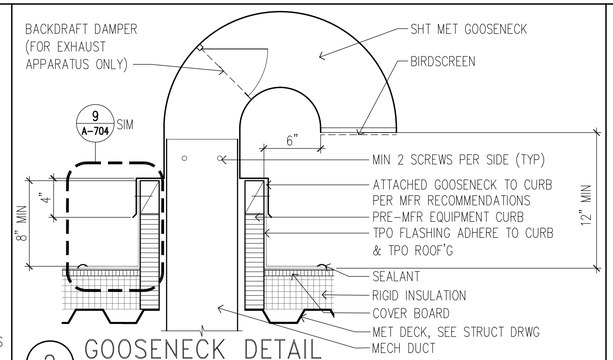

2 GOOSENECK DETAIL
SCALE: 1 1/2" = 1'-0"
0 6" 1' 2'
SCALE: 1 1/2" = 1'-0"

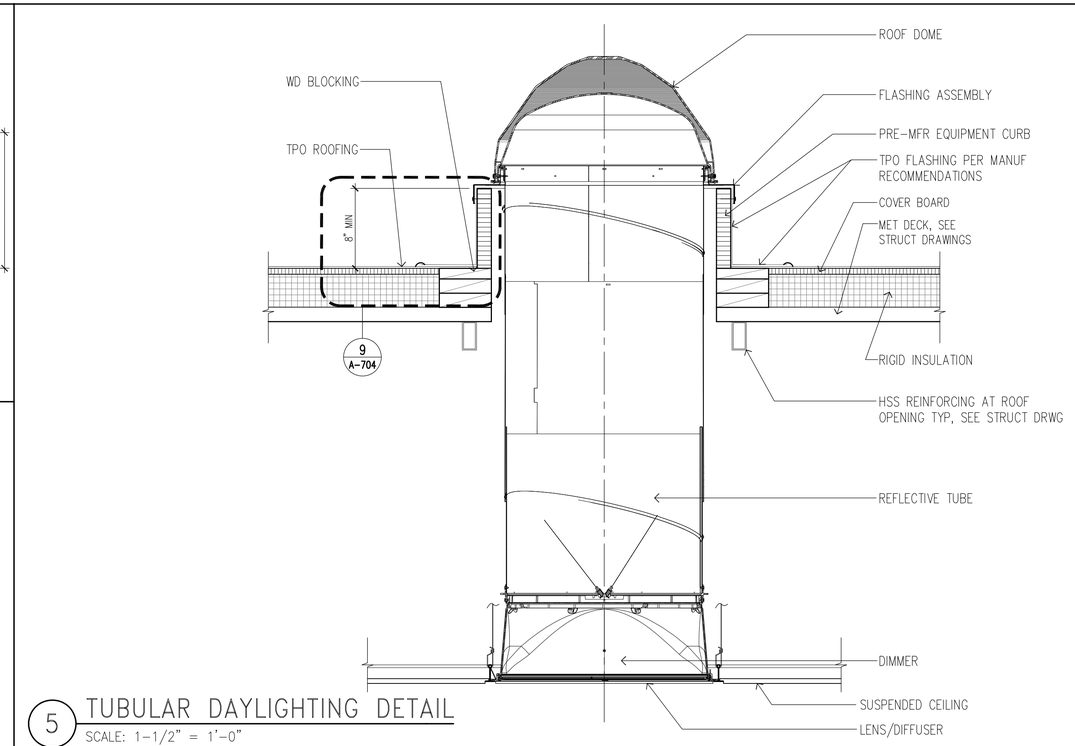

5 TUBULAR DAYLIGHTING DETAIL
SCALE: 1-1/2" = 1'-0"

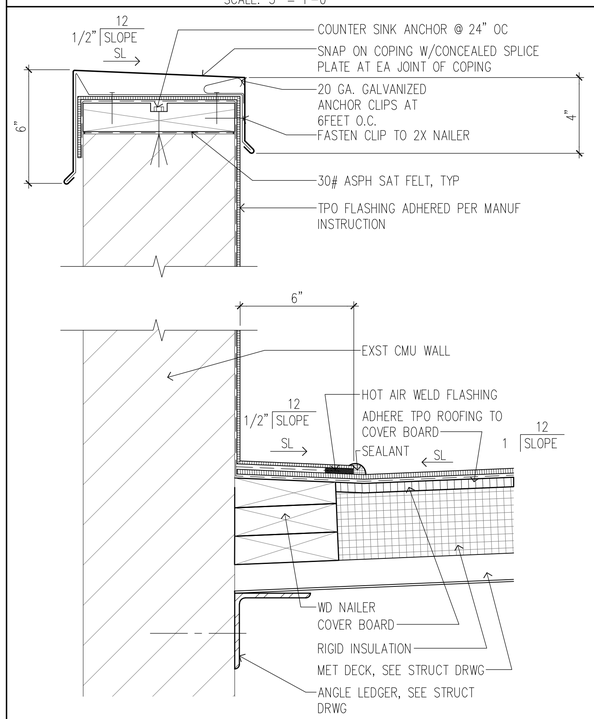

4 COPING DETAIL/EDGE DETAIL
SCALE: 3" = 1'-0"

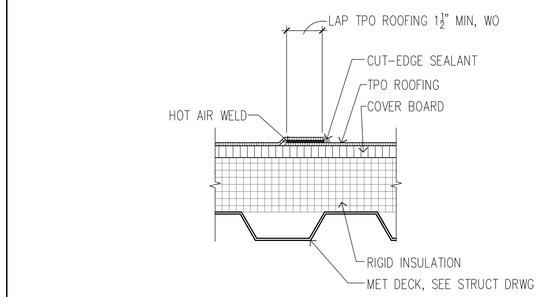

3 TPO ROOFING LAP DETAIL
SCALE: 3" = 1'-0"

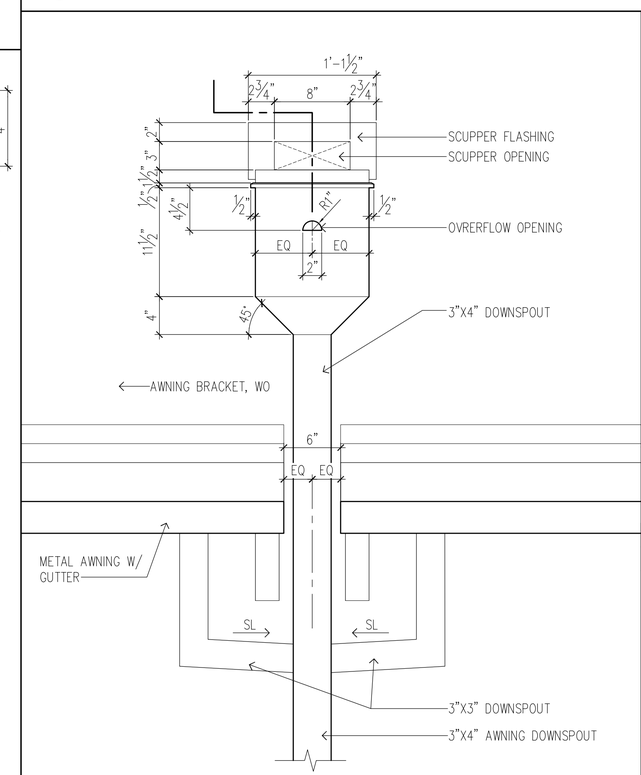

10 LEADER BOX ELEV DETAIL
SCALE: 1 1/2" = 1'-0"

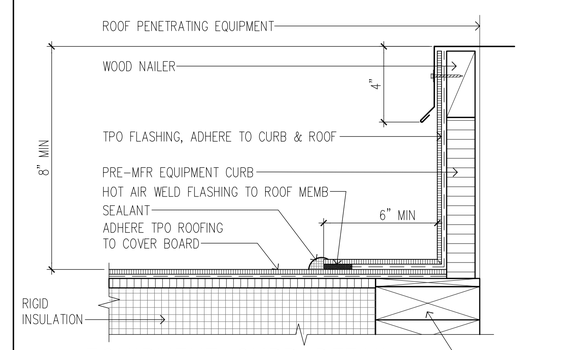

9 EQUIPMENT CURB DETAIL
SCALE: 3" = 1'-0"

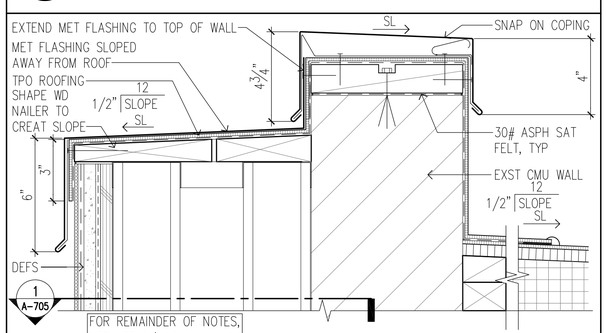

7 FLASHING DETAIL AT BUILDOUT PILASTER
SCALE: 3" = 1'-0"

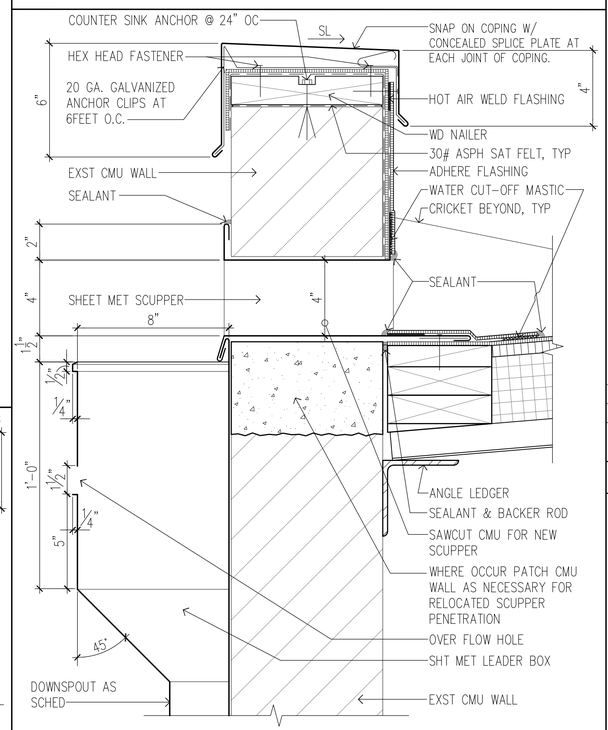

8 SCUPPER DETAIL
SCALE: 3" = 1'-0"

REVISION NO.	SYM.	DESCRIPTION	SHT./OF	DATE	APPROVED

FRED K. ERSKINE
LICENSED PROFESSIONAL ARCHITECT
No. 10192
HAWAII, U.S.A.

THIS LICENSE EXPIRES APRIL 30, 2024

SIGNATURE

THIS WORK WAS PREPARED BY ME OR UNDER MY SUPERVISION AND CONSTRUCTION OF THIS PROJECT WILL BE OBSERVED BY A QUALIFIED PROFESSIONAL IN CONSTRUCTION AS DEFINED IN CHAPTER 16-115 OF THE HAWAII ADMINISTRATIVE RULES, DEPARTMENT OF COMMERCE AND CONSUMER AFFAIRS (ENTITLED PROFESSIONAL ENGINEERS, ARCHITECTS, SURVEYORS AND LANDSCAPE ARCHITECTS).

STATE OF HAWAII
DEPARTMENT OF LAND AND NATURAL RESOURCES
ENGINEERING DIVISION

HAWAII DISTRICT LAND OFFICE
HILO, HAWAI'I

ROOF DETAILS

DESIGNED: KK	SUBMITTED:
DRAWN: KA, TW, WL	DATE: NOVEMBER 2022
CHECKED: FE	SCALE: AS NOTED
APPROVED: Carty Chang E-signed 2022-11-28 04:17PM HST carty.s.chang@hawaii.gov State of Hawaii Chief Engineer	DRAWING NO. A-704
CHIEF ENGINEER	

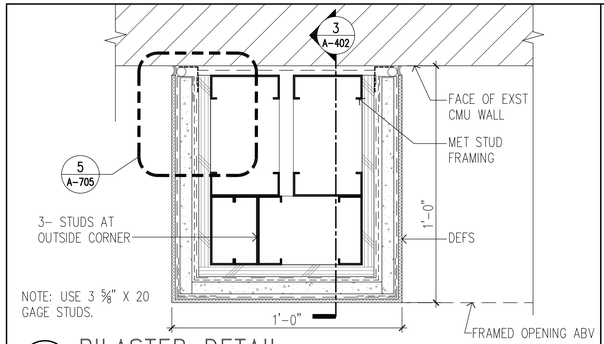

1 PILASTER DETAIL
SCALE: 3" = 1'-0"
SCALE: 3" = 1'-0"

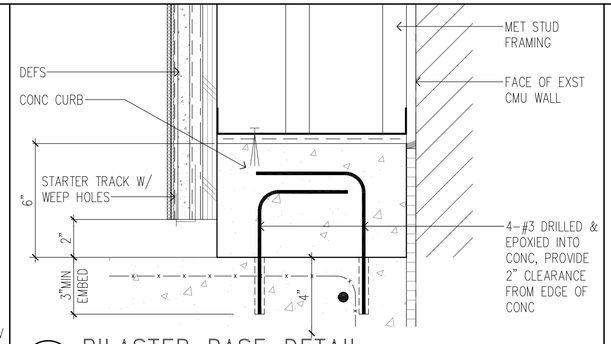

2 PILASTER BASE DETAIL
SCALE: 3" = 1'-0"

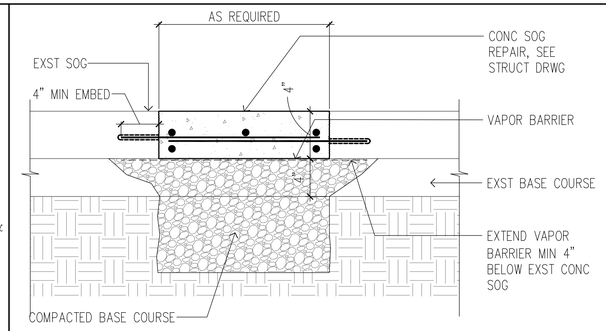

3 CONC PATCH DETAIL
SCALE: 1-1/2" = 1'-0"
SCALE: 1 1/2" = 1'-0"

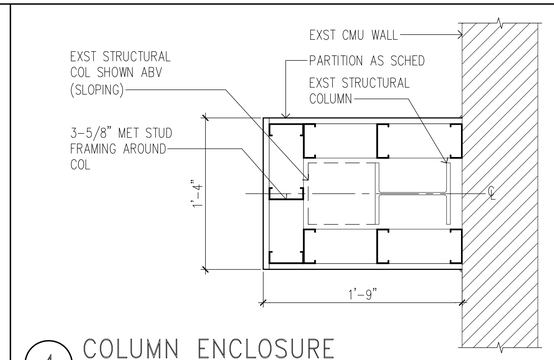

4 COLUMN ENCLOSURE
SCALE: 1-1/2" = 1'-0"

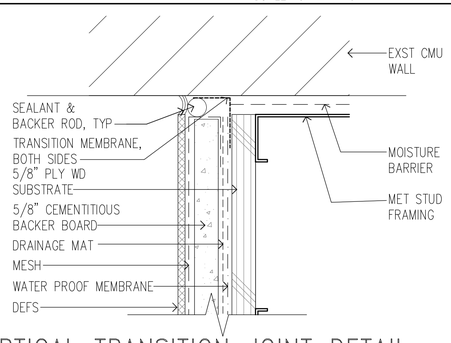

5 VERTICAL TRANSITION JOINT DETAIL
SCALE: 6" = 1'-0"
SCALE: 6" = 1'-0"

NOTE:
CONCRETE NAIL-IN ANCHORS SHALL NOT BE LOCATED AT MORTAR JOINTS AND CENTER OF CMU BLOCKS.

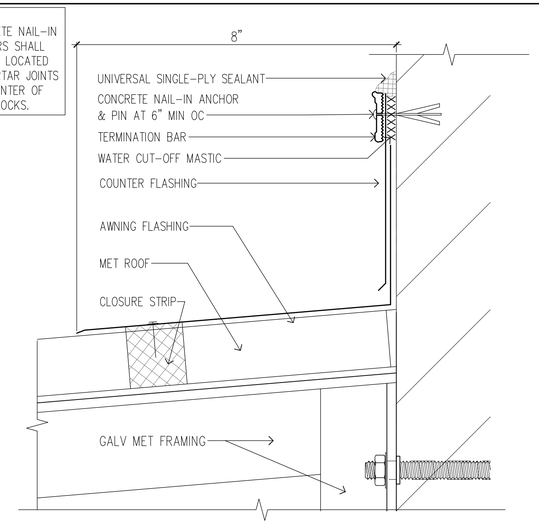

6 FLASHING DET
SCALE: 6" = 1'-0"
SCALE: 6" = 1'-0"

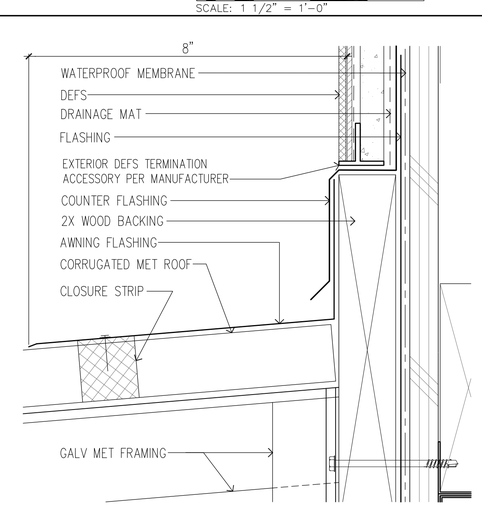

7 FLASHING DET
SCALE: 6" = 1'-0"

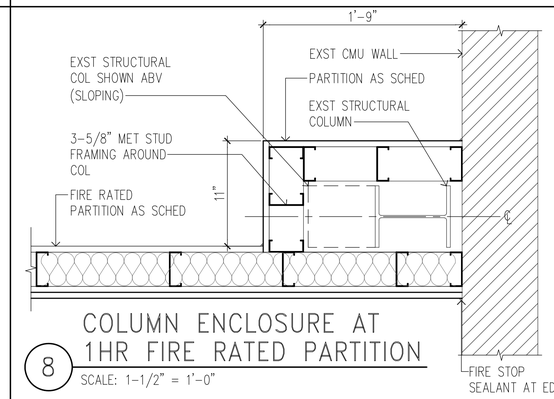

8 COLUMN ENCLOSURE AT 1HR FIRE RATED PARTITION
SCALE: 1-1/2" = 1'-0"

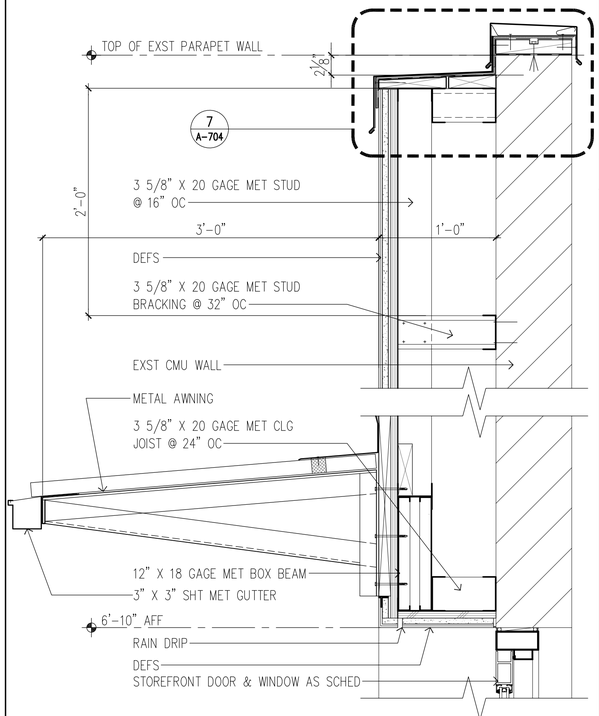

9 VERTICAL TRANSITION JOINT DETAIL
SCALE: 1 1/2" = 1'-0"

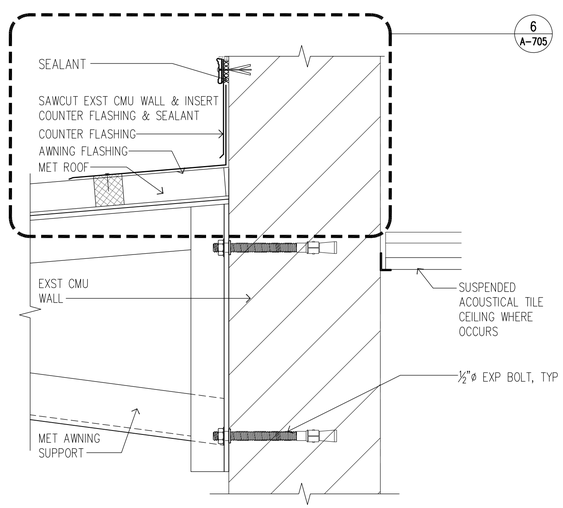

10 AWNING CONN DET
SCALE: 3" = 1'-0"

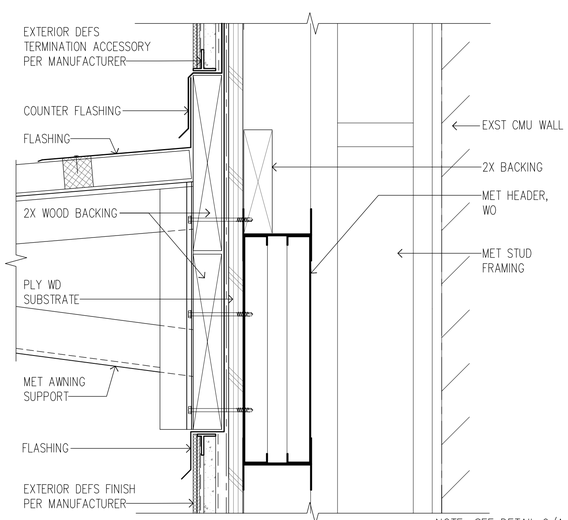

NOTE: SEE DETAIL 9/A-705 FOR FRAMING NOTES.

11 AWNING CONN DET
SCALE: 3" = 1'-0"

REVISION NO.	SYM.	DESCRIPTION	SHT./OF	DATE	APPROVED

FRED K. ERSKINE
LICENSED PROFESSIONAL ARCHITECT
No. 10192
HAWAII, U.S.A.

THIS LICENSE EXPIRES APRIL 30, 2024

SIGNATURE

THIS WORK WAS PREPARED BY ME OR UNDER MY SUPERVISION AND CONSTRUCTION OF THIS PROJECT WILL BE UNDER MY OBSERVATION. (OBSERVATION OF CONSTRUCTION AS DEFINED IN CHAPTER 16-115 OF THE HAWAII ADMINISTRATIVE RULES, DEPARTMENT OF COMMERCE AND CONSUMER AFFAIRS ENTITLED PROFESSIONAL ENGINEERS, ARCHITECTS, SURVEYORS AND LANDSCAPE ARCHITECTS).

STATE OF HAWAII
DEPARTMENT OF LAND AND NATURAL RESOURCES
ENGINEERING DIVISION

HAWAII DISTRICT LAND OFFICE
HILO, HAWAI'I

MISC DETAILS

DESIGNED: KK	SUBMITTED:
DRAWN: KA, TW, WL	DATE: NOVEMBER 2022
CHECKED: FE	SCALE: AS NOTED
APPROVED:	Carty Chang E-signed 2022-11-28 04:17PM HST carty.s.chang@hawaii.gov
CHIEF ENGINEER	State of Hawaii Chief Engineer

DRAWING NO.
A-705

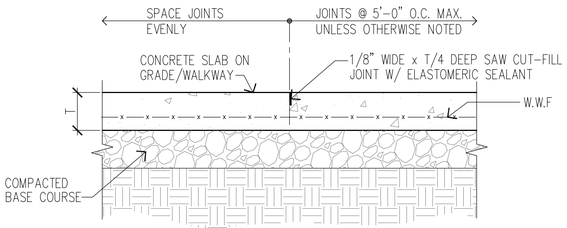

NOTE:
SAW CUTTING SHALL OCCUR AS SOON AS CONCRETE SURFACE IS FIRM ENOUGH TO NOT BE TORN BY CUTTING BLADE AND BEFORE SHRINKAGE CRACKING OCCURS, BUT NO LATER THAN 12 HOURS AFTER CONCRETE HAS BEEN POURED.

1 TYP SAWCUT DETAIL
SCALE: 1-1/2" = 1'-0"

0 6" 1' 2'
SCALE: 1 1/2" = 1'-0"

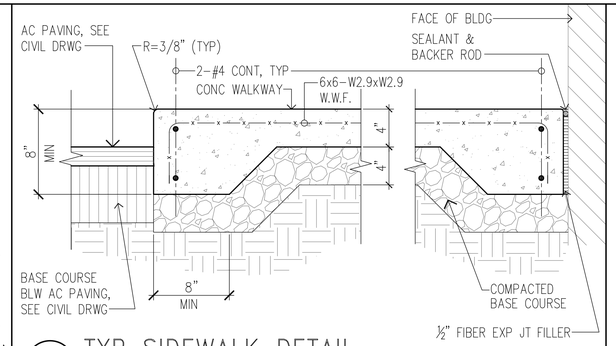

2 TYP SIDEWALK DETAIL
SCALE: 1-1/2" = 1'-0"

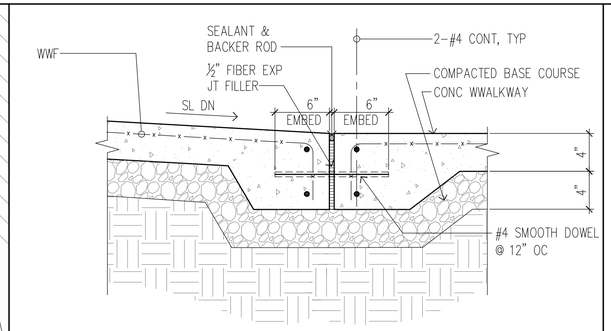

3 WALKWAY & RAMP CONNECTION
SCALE: 1-1/2" = 1'-0"

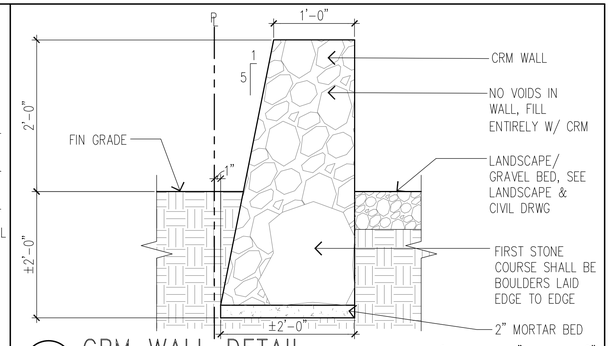

4 CRM WALL DETAIL
SCALE: 1" = 1'-0"

0 1" 2"
SCALE: 1" = 1'-0"

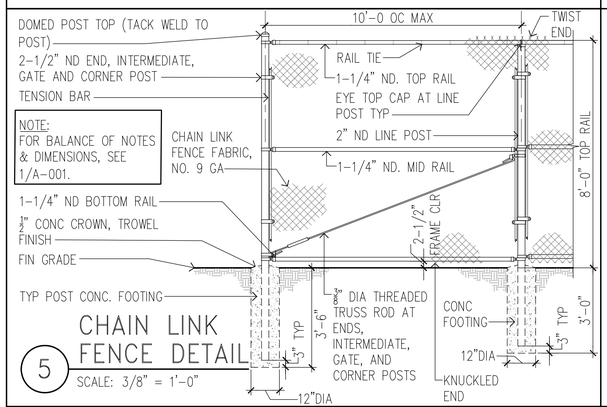

NOTE:
FOR BALANCE OF NOTES & DIMENSIONS, SEE 1/A-001.

5 CHAIN LINK FENCE DETAIL
SCALE: 3/8" = 1'-0"

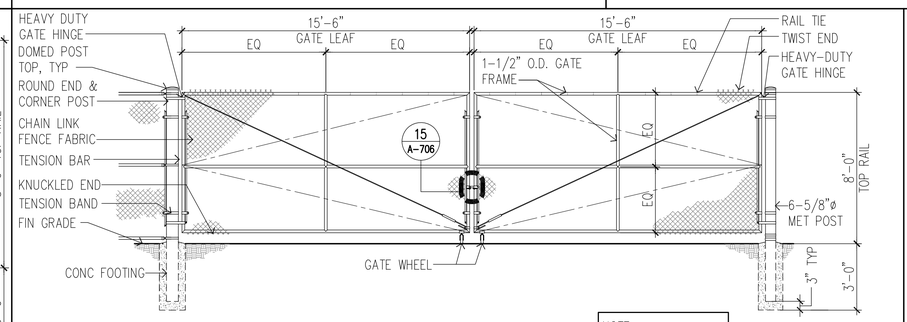

NOTE:
FOR BALANCE OF NOTES & DIMENSIONS, SEE 5 & 8/A-706.

6 FENCE ENCLOSURE GATE DETAIL
SCALE: 1/4" = 1'-0"

0 2' 4' 8'
SCALE: 1/4" = 1'-0"

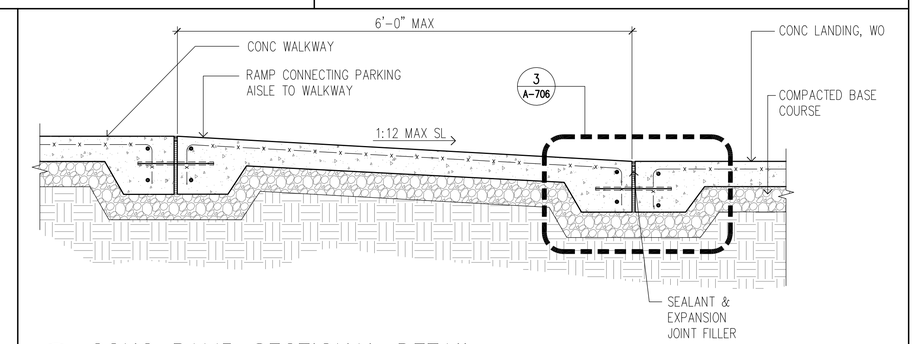

7 CONC RAMP SECTIONAL DETAIL
SCALE: 1" = 1'-0"

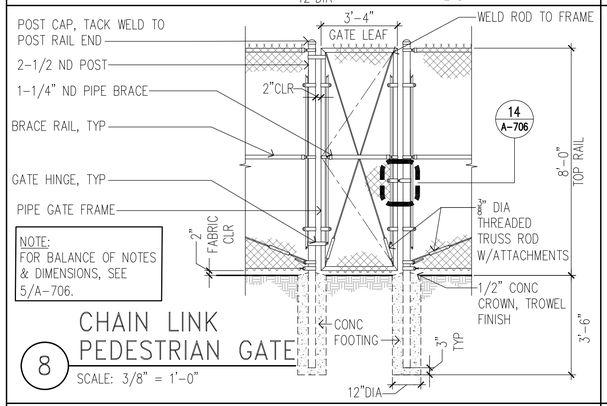

NOTE:
FOR BALANCE OF NOTES & DIMENSIONS, SEE 5/A-706.

8 CHAIN LINK PEDESTRIAN GATE
SCALE: 3/8" = 1'-0"

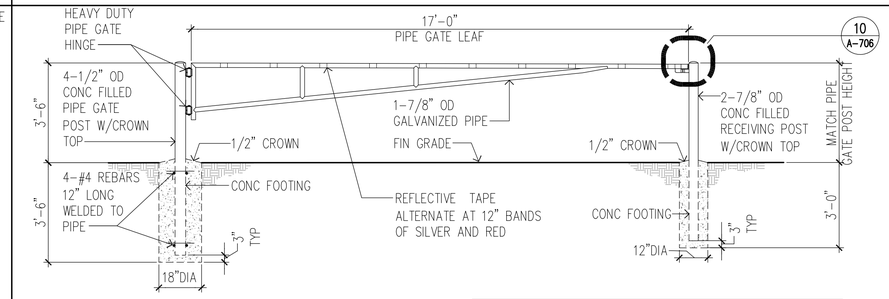

NOTE:
1. HINGE & LOCK ASSEMBLIES SHALL BE HOT DIPPED GALVANIZED AFTER FABRICATION & FIELD WELDED TO GATE POSTS
2. PAINT GATE ASSEMBLY SAFETY YELLOW.

9 PIPE GATE
SCALE: 3/8" = 1'-0"

0 2' 4' 6'
SCALE: 3/8" = 1'-0"

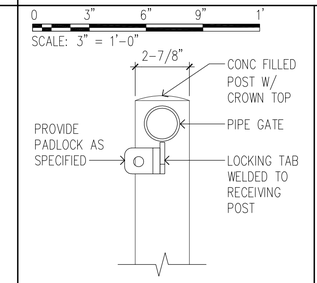

10 PIPE GATE LOCK TAB
SCALE: 3" = 1'-0"

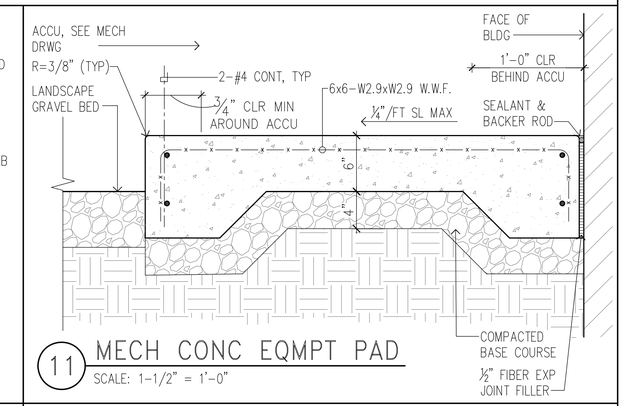

11 MECH CONC EQMPT PAD
SCALE: 1-1/2" = 1'-0"

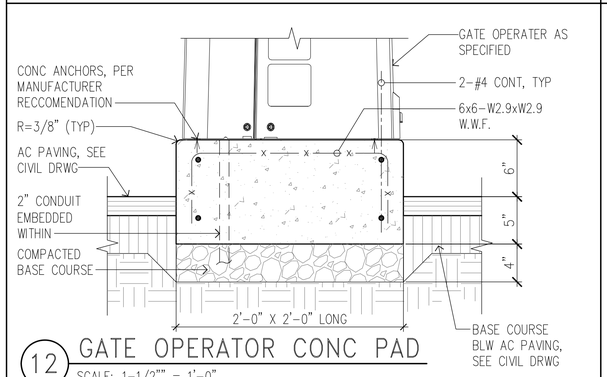

12 GATE OPERATOR CONC PAD
SCALE: 1-1/2"" = 1'-0"

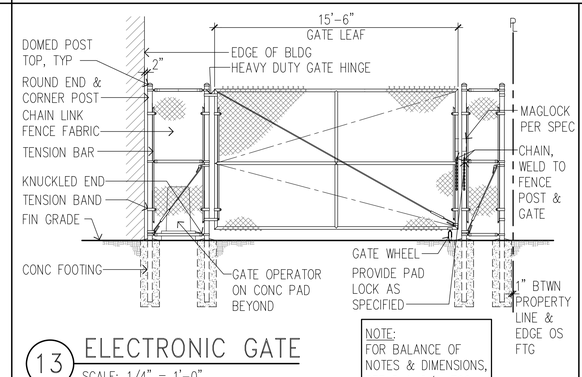

NOTE:
FOR BALANCE OF NOTES & DIMENSIONS, SEE 5 & 8/A-706.

13 ELECTRONIC GATE
SCALE: 1/4" = 1'-0"

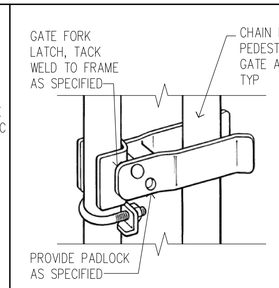

14 GATE FORK LATCH
NTS

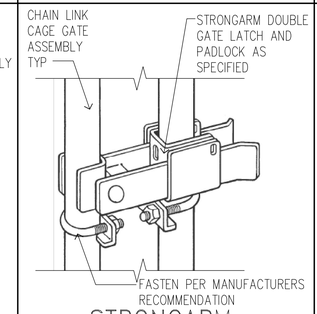

15 STRONGARM LATCH
NTS

REVISION NO.	SYM.	DESCRIPTION	SHT./OF	DATE	APPROVED

FRED K. ERSKINE
LICENSED PROFESSIONAL ARCHITECT
No. 10192
HAWAII, U.S.A.

THIS LICENSE EXPIRES APRIL 30, 2024

SIGNATURE

THIS WORK WAS PREPARED BY ME OR UNDER MY SUPERVISION AND PROVIDES INSPECTION OF THIS PROJECT WILL BE UNDER MY OBSERVATION. OBSERVATION OF CONSTRUCTION AS DEFINED IN CHAPTER 16-115 OF THE HAWAII ADMINISTRATIVE RULES, DEPARTMENT OF COMMERCE AND CONSUMER AFFAIRS ENTITLED PROFESSIONAL ENGINEERS, ARCHITECTS, SURVEYORS AND LANDSCAPE ARCHITECTS).

STATE OF HAWAII
DEPARTMENT OF LAND AND NATURAL RESOURCES
ENGINEERING DIVISION

HAWAII DISTRICT LAND OFFICE
HILO, HAWAI'I

SITE DETAILS

DESIGNED: KK	SUBMITTED:
DRAWN: KA, TW, WL	DATE: NOVEMBER 2022
CHECKED: FE	SCALE: AS NOTED
APPROVED:	Carty Chang E-signed 2022-11-28 04:17PM HST carty.s.chang@hawaii.gov State of Hawaii Chief Engineer
CHIEF ENGINEER	

DRAWING NO.
A-706

GENERAL:

A. WORKMANSHIP AND MATERIALS SHALL CONFORM TO THE STATE BUILDING CODE OF HAWAII (IBC, 2006 EDITION AS AMENDED BY THE COUNTY OF HAWAII). HOWEVER, WHERE REFERENCE IS MADE TO PERFORMANCE CONFORMING TO OTHER STANDARDS THE MORE STRINGENT SHALL APPLY.

B. THE CONTRACTOR SHALL COMPARE ALL THE CONTRACT DOCUMENTS WITH EACH OTHER AND REPORT IN WRITING TO THE ENGINEER ALL INCONSISTENCIES AND OMISSIONS.

C. THE CONTRACTOR SHALL TAKE FIELD MEASUREMENTS AND VERIFY FIELD CONDITIONS AND SHALL COMPARE SUCH FIELD MEASUREMENTS AND CONDITIONS WITH THE DRAWINGS BEFORE COMMENCING WORK. REPORT IN WRITING TO THE ENGINEER ALL INCONSISTENCIES AND OMISSIONS.

D. THE CONTRACTOR SHALL BE RESPONSIBLE FOR METHODS OF CONSTRUCTION, WORKMANSHIP AND JOB SAFETY. THE CONTRACTOR SHALL PROVIDE TEMPORARY SHORING AND BRACING AS REQUIRED FOR STABILITY OF STRUCTURAL MEMBERS AND SYSTEMS.

E. CONSTRUCTION LOADING SHALL NOT EXCEED DESIGN LIVE LOAD UNLESS SPECIAL SHORING IS PROVIDED. ALLOWABLE LOADS SHALL BE REDUCED IN AREAS WHERE THE STRUCTURE HAS NOT ATTAINED FULL DESIGN STRENGTH.

F. THE CONTRACTOR SHALL BE RESPONSIBLE FOR PROTECTION OF THE ADJACENT PROPERTIES, STRUCTURES, STREETS AND UTILITIES DURING THE CONSTRUCTION PERIOD.

G. DETAILS NOTED AS TYPICAL ON THE STRUCTURAL DRAWINGS SHALL APPLY IN ALL CONDITIONS UNLESS SPECIFICALLY SHOWN OR NOTED.

H. THE GENERAL CONTRACTOR AND HIS SUBCONTRACTORS MUST SUBMIT IN WRITING ANY REQUESTS FOR MODIFICATIONS TO THE PLANS AND SPECIFICATIONS.

DESIGN CRITERIA:

A. OCCUPANCY CATEGORY ——— II

B. SEISMIC
   A. SEISMIC IMPORTANCE FACTOR: ——— 1.00
   B. MAPPED SPECTRAL RESPONSE ACCELERATIONS:
      A. SS ——— 1.500
      B. S1 ——— 0.600
   C. SPECTRAL RESPONSE COEFFICIENTS
      A. SDS ——— 1.000
      B. SD1 ——— 0.6
   D. SEISMIC DESIGN CATEGORY: ——— D

C. WIND
   A. BASIC WIND SPEED – 3 SECOND GUST ——— 105 MPH
   B. WIND IMPORTANCE FACTOR & BUILDING CATEGORY ——— 1.00
   C. WIND EXPOSURE CATEGORY ——— B
   D. Kzt ——— 1.0
   E. Kd ——— 0.7
   F. COMPONENTS AND CLADDING ——— 19 PSF
   G. INTERNAL PRESSURE COEFFICIENT ——— 0.18

D. DESIGN LIVE LOADS
   A. ROOF ——— 20 PSF

CONCRETE:

A. CONCRETE CONSTRUCTION SHALL CONFORM TO AMERICAN CONCRETE INSTITUTE ACI 318R–05.

B. CONCRETE SHALL BE REGULAR WEIGHT HARD ROCK CONCRETE AND SHALL HAVE THE FOLLOWING MINIMUM 28 DAY COMPRESSIVE STRENGTHS:
   A. FOUNDATION RETROFIT ——— 3,000 PSI
   B. SLABS ON GRADE ——— 3,000 PSI
   C. ALL OTHER CONCRETE ——— 3,000 PSI

C. CONCRETE DELIVERY TICKETS SHALL RECORD ALL FREE WATER IN THE MIX: AT BATCHING BY PLANT, FOR CONSISTENCY BY DRIVER, AND ANY ADDITIONAL REQUEST BY CONTRACTOR IF PERMITTED BY THE MIX DESIGN.

D. ALL INSERTS, ANCHOR BOLTS, PLATES, AND OTHER ITEMS TO BE CAST IN THE CONCRETE SHALL BE HOT–DIPPED GALVANIZED UNLESS OTHERWISE NOTED.

E. REINFORCING BARS, ANCHOR BOLTS, INSERTS, AND OTHER ITEMS TO BE CAST IN THE CONCRETE SHALL BE SECURED IN POSITION PRIOR TO PLACEMENT OF CONCRETE.

F. CONDUITS, PIPES, AND SLEEVES PASSING THROUGH A SLAB OR FOOTING AND NOT CONFORMING TO TYPICAL DETAILS SHALL BE LOCATED AND SUBMITTED TO THE ARCHITECT FOR APPROVAL.

CONCRETE (CONT'D):

G. THE CONTRACTOR SHALL LOCATE CONSTRUCTION JOINTS SO AS NOT TO IMPAIR THE STRENGTH OF THE STRUCTURE AND TO MINIMIZE SHRINKAGE STRESSES. SUBMIT LOCATION OF CONSTRUCTION JOINTS TO THE ARCHITECT FOR APPROVAL, UNLESS OTHERWISE NOTED.

H. SEE ARCHITECTURAL DRAWINGS FOR CHAMFERS, EDGE RADII, DRIPS, REGLETS, FINISHES AND OTHER NON–STRUCTURAL ITEMS NOT SHOWN OR SPECIFIED ON THE STRUCTURAL DRAWINGS.

I. NON–SHRINK GROUT SHALL BE A PREMIXED NON–METALLIC FORMULA, CAPABLE OF DEVELOPING A MINIMUM COMPRESSIVE STRENGTH OF 3,000 PSI IN 1 DAY AND 5,000 PSI IN 28 DAYS.

J. THE STATE SHALL BE NOTIFIED AT LEAST 3 WORKING DAYS PRIOR TO ANY CONCRETE POUR. NO CONCRETE SHALL BE POURED PRIOR TO OBSERVATION BY THE ARCHITECT OR HIS REPRESENTATIVE.

K. THE FOLLOWING ITEMS SHALL BE SUBMITTED TO THE ENGINEER FOR REVIEW:
   A. CONCRETE MIX DESIGNS SHALL BE PREPARED FOR EACH TYPE AND STRENGTH OF CONCRETE REQUIRED, DETERMINED BY EITHER LABORATORY TRIAL MIX OR FIELD DATA BASES, AS FOLLOWS:
      1. NORMAL WEIGHT CONCRETE SHALL BE PROPORTIONED ACCORDING TO ACI 211.1 AND ACI 301.
      2. CONCRETE FOR FOUNDATIONS SHALL HAVE A 5" MAXIMUM SLUMP.
      3. CONCRETE FOR SLABS–ON–GRADE SHALL HAVE A MINIMUM CEMENT CONTENT OF 470 LBS/C.Y. AND A 4" MAXIMUM SLUMP.

L. TESTING AGENCY: THE CONTRACTOR SHALL ENGAGE A QUALFIED INDEPENDENT TESTING AND INSPECTION AGENCY TO SAMPLE MATERIALS AND PERFORM TESTS DURING CONCRETE PLACEMENT, AND SUBMIT TEST REPORTS. TESTING SERVICES SHALL INCLUDE: TESTING OF COMPOSITE SAMPLES OF FRESH CONCRETE OBTAINED ACCORDING TO ASTM C172 TO THE FOLLOWING REQUIREMENTS:
   A. TESTING FREQUENCY: ONE COMPOSITE SAMPLE SHALL BE OBTAINED FOR EACH DAY'S POUR OF EACH CONCRETE MIX EXCEEDING 5 C.Y. BUT LESS THAN 25 C.Y., PLUS ONE SET FOR EACH ADDITIONAL 50 C.Y. OR FRACTION THEREOF.
   B. SLUMP TESTS SHALL BE PERFORMED PER ASTM C143. ONE TEST SHALL BE MADE AT THE POINT OF PLACEMENT FOR EACH COMPOSITE SAMPLE, BUT NOT LESS THAN ONE TEST FOR EACH DAY'S POUR OF EACH CONCRETE MIX. ADDITIONAL TESTS SHALL BE PERFORMED WHEN CONCRETE CONSISTENCY APPEARS TO CHANGE.
   C. COMPRESSION TEST SPECIMENS SHALL CONFORM TO ASTM C31. ONE SET OF FOUR STANDARD CYLINDER SPECIMENS FOR EACH COMPOSITE SAMPLE SHALL BE CAST AND LABORATORY CURED. COMPRESSIVE STRENGTH TESTS SHALL CONFORM TO ASTM C39. ONE LABORATORY CURED SPECIMEN SHALL BE TESTED AT 7 DAYS, TWO AT 28 DAYS, AND ONE RETAINED FOR LATER TESTING IF REQUIRED.
   D. COST OF TESTING WILL BE BORNE BY THE CONTRACTOR

REINFORCING STEEL:

A. REINFORCING STEEL (FOR NORMAL USE, NOT WELDED) SHALL BE DEFORMED BARS CONFORMING TO ASTM A615, GRADE 60.

B. CLEAR CONCRETE COVER FOR REINFORCING BARS SHALL BE AS FOLLOWS, UNLESS OTHERWISE NOTED:
   A. FOOTINGS, GRADE BEAMS, ETC. CAST AGAINST EARTH ——— 3"
   B. FOOTINGS, GRADE BEAMS, ETC. FORMED AND EXPOSED TO EARTH OR WEATHER ——— 2"

C. CLEAR DISTANCE BETWEEN THE SURFACE OF A BAR AND ANY SURFACE OF A MASONRY UNIT SHALL BE NOT LESS THAN 1/2 INCH, UNLESS OTHERWISE NOTED.

D. REINFORCING STEEL SHALL BE SPLICED WHERE INDICATED ON PLANS. PROVIDE LAP SPLICE LENGTH PER TYPICAL DETAILS AND SCHEDULE, UNLESS OTHERWISE NOTED.

E. BAR LAPS SHALL BE MADE AWAY FROM POINTS OF MAXIMUM STRESS. SPLICES SHALL BE STAGGERED WHERE POSSIBLE.

F. BAR BENDS AND HOOKS SHALL BE "STANDARD HOOKS" IN ACCORDANCE WITH ACI 318.

G. WELDING OF REINFORCING STEEL IS NOT PERMITTED.

CONCRETE MASONRY UNITS (CMU):

A. REINFORCED MASONRY ASSEMBLIES SHALL HAVE A MINIMUM COMPRESSIVE STRENGTH OF 1500 PSI.

B. CONCRETE MASONRY UNITS SHALL BE TYPE II, NORMAL WEIGHT HOLLOW LOAD–BEARING UNITS CONFORMING TO ASTM C–90 AND HAVE A MINIMUM COMPRESSIVE STRENGTH OF 1,900 PSI.

C. MORTAR SHALL BE TYPE "M" CONFORMING TO ASTM C270 AND HAVE A MINIMUM COMPRESSIVE STRENGTH OF 2,500 PSI AT 28 DAYS.

CONCRETE MASONRY UNITS (CMU) (CONT'D):

D. GROUT SHALL CONFORM TO ASTM C476 AND HAVE A MINIMUM COMPRESSIVE STRENGTH OF 2,500 PSI AT 28 DAYS.

E. ALL CELLS AND BOND COURSES WITH REINFORCEMENT AND INSERTS SHALL BE SOLID GROUTED. CLEANOUTS SHALL BE PROVIDED FOR ALL GROUT POURS OVER 5'–4" IN HEIGHT.

F. WHEN GROUTING IS STOPPED FOR ONE HOUR OR LONGER, HORIZONTAL CONSTRUCTION JOINTS SHALL BE FORMED BY STOPPING THE GROUT POUR 1 1/2 INCHES BELOW THE TOP OF THE UPPERMOST UNIT.

G. THE CONTRACTOR SHALL LOCATE CONSTRUCTION JOINTS SO AS NOT TO IMPAIR THE STRENGTH OF THE STRUCTURE AND TO MINIMIZE SHRINKAGE STRESSES.

H. WALLS SHALL BE CONSTRUCTED IN CONVENTIONAL RUNNING BOND, UNLESS OTHERWISE NOTED.

I. MATCH EXISTING CMU WALL LAYING PATTERN, HEIGHT OF UNITS, SURFACE TEXTURE, AND JOINT TYPE.

J. UNLESS OTHERWISE NOTED, CMU WALLS SHALL BE REINFORCED AS FOLLOWS:
   8 INCHES THICK #4@24" O.C. VERTICAL REINF 2–#4@48" HORIZ REINF

K. THE FOLLOWING ITEMS SHALL BE SUBMITTED TO THE ENGINEER FOR REVIEW:
   A. STEEL REINFORCEMENT SHOP DRAWINGS WHICH SHALL INCLUDE DETAILS OF FABRICATION, BENDING, PLACEMENT, MATERIAL, GRADE, SCHEDULES, AND BENDS, PREPARED ACCORDING TO ACI 315, "DETAILS AND DETAILING OF CONCRETE REINFORCEMENT.
   B. MATERIAL CERTIFICATES, SIGNED BY MANUFACTURERS CERTIFYING THAT THE MATERIAL AND GRADE INDICATED FOR REINFORCING BARS COMPLY WITH THE REQUIREMENTS.

EPOXIED ANCHOR INSTALLATIONS:

A. EPOXY USED FOR ANCHORING THREADED RODS AND REINFORCING STEEL INTO EXISTING CONCRETE OR FULLY GROUTED MASONRY SHALL BE HILTI HIT–HY 200 –A OR –R SYSTEM, SIMPSON SET–XP SYSTEM, OR APPROVED EQUAL, AND SHALL BE INSTALLED PER MANUFACTURER'S RECOMMENDATIONS.

B. THE CONTRACTOR SHALL VERIFY THAT DRILLED ANCHORS ARE INSTALLED IN SOLID/FULLY GROUTED EXISTING MASONRY WALLS/CELLS. WHERE WALLS/CELLS ARE NOT FULLY GROUTED, THEY SHALL BE GROUTED WITH GROUT CONFORMING TO ASTM C476 HAVING A MINIMUM COMPRESSIVE STRENGTH OF 2,500 PSI AT 28 DAYS, TO PROVIDE A MINIMUM OF 8 INCHES ALL AROUND EACH ANCHOR INSTALLATION, UNLESS OTHERWISE NOTED.

C. ANCHORS SHALL BE INSTALLED WITH THE MINIMUM EMBEDMENT REQUIREMENTS AS INDICATED ON THE DRAWINGS.

REVISION NO.	SYM.	DESCRIPTION	SHT./OF	DATE	APPROVED

BRENT K.K. CHING
LICENSED PROFESSIONAL ENGINEER
No. 17381–S
HAWAII U.S.A.

THIS LICENSE EXPIRES APRIL 30, 2024

SIGNATURE

THIS WORK WAS PREPARED BY ME OR UNDER MY SUPERVISION AND CONSTRUCTION OF THIS PROJECT WILL BE UNDER MY OBSERVATION. (OBSERVATION OF CONSTRUCTION AS DEFINED IN CHAPTER 16–115 OF THE HAWAII ADMINISTRATIVE RULES, DEPARTMENT OF COMMERCE AND CONSUMER AFFAIRS, ENTITLED PROFESSIONAL ENGINEERS, ARCHITECTS, SURVEYORS AND LANDSCAPE ARCHITECTS).

STATE OF HAWAII
DEPARTMENT OF LAND AND NATURAL RESOURCES
ENGINEERING DIVISION

HAWAII DISTRICT LAND OFFICE
HILO, HAWAI'I

GENERAL NOTES

DESIGNED: BC	SUBMITTED:
DRAWN: IB	DATE: NOV 2022
CHECKED: BC	SCALE: AS NOTED

APPROVED: Carty Chang
E-signed 2022-11-28 04:17PM HST
carty.s.chang@hawaii.gov
State of Hawaii
Chief Engineer
CHIEF ENGINEER

DRAWING NO. S-001

METAL DECK:

A. METAL DECK AND ACCESSORIES SHALL BE OF THE TYPE AND GAGE CALLED FOR ON THE DRAWINGS.

B. METAL DECK AND ACCESSORIES SHALL BE FORMED FROM STEEL SHEETS CONFORMING TO ASTM 653 SQ GRADE 33, MINIMUM YIELD STRENGTH 33 KSI, WITH G60 GALVANIZED COATING.

C. DECK SHALL BE THREE SPAN CONTINUOUS WHERE POSSIBLE. DO NOT LOCATE SINGLE SPANS AT EDGES OR CORNERS.

D. MINIMUM BEARING OF DECKING ON SUPPORTS SHALL BE 2 INCHES.

E. SCREW FASTENING OF METAL ROOF DECK
   A. SEE ROOF FRAMING PLAN FOR EXTENT AND ORIENTATION OF METAL DECK.
   B. AT EACH SUPPORT, PROVIDE MINIMUM 4–#12 TRAXX SCREWS PER 36" WIDTH OF DECK UNLESS OTHERWISE NOTED.
   C. AT EACH SUPPORT, AT OVERLAPPING SEAMS, PROVIDE MINIMUM 1–#12 TRAXX SCREW.
   D. ALONG SEAMS AND ALONG ALL EDGE AND PERIMETER SUPPORTS, PROVIDE MINIMUM #12 TRAXX SCREWS AT 6" ON CENTERS.

F. THE FOLLOWING SHALL BE SUBMITTED TO THE ENGINEER FOR REVIEW:
   A. SHOP DRAWINGS DETAILING LAYOUT OF METAL DECK, CONNECTIONS, FASTENING, AND OTHER PERTINENT DATA.
   B. MILL TEST REPORTS SIGNED BY MANUFACTURERS CERTIFYING THAT THE MATERIALS AND OTHER COMPONENTS COMPLY WITH REQUIREMENTS.

STRUCTURAL STEEL:

A. FABRICATION AND ERECTION OF STRUCTURAL STEEL SHALL CONFORM TO THE AMERICAN INSTITUTE OF STEEL CONSTRUCTION MANUAL OF STEEL CONSTRUCTION, THIRTEENTH EDITION.

B. STRUCTURAL STEEL SHALL CONFORM TO ASTM A36 UNLESS OTHERWISE NOTED.

C. STEEL WIDE FLANGE SECTIONS SHALL CONFORM TO ASTM A992.

D. STEEL CHANNELS, S, M AND HP SHAPES SHALL CONFORM TO ASTM A36.

E. BOLTS FOR STRUCTURAL STEEL TO STRUCTURAL STEEL CONNECTIONS SHALL CONFORM TO ASTM A307, GRADE A UNLESS OTHERWISE NOTED.

F. THREADED RODS SHALL CONFORM TO ASTM F1554 GRADE 36 UNLESS OTHERWISE NOTED.

G. ANCHOR RODS FOR STRUCTURAL STEEL TO CONCRETE PEDESTAL OR FOOTING ANCHORAGE SHALL CONFORM TO ASTM F1554 GRADE 36 OTHERWISE NOTED.

H. WELDS AND WELDING PROCEDURES SHALL CONFORM TO THE STRUCTURAL WELDING CODE AWS D1.1 OF THE AMERICAN WELDING SOCIETY.

I. WELDING SHALL BE PERFORMED BY WELDERS PREQUALIFIED FOR WELDING PROCEDURES TO BE USED.

J. WELDING ELECTRODES SHALL BE E70XX.

K. ALL STEEL SHALL BE PRIME PAINTED IN THE SHOP.

L. EXPOSED STEEL SHALL BE HOT–DIPPED GALVANIZED.

M. THE FOLLOWING SHALL BE SUBMITTED TO THE ENGINEER FOR REVIEW:
   A. SHOP DRAWINGS DETAILING FABRICATION OF STRUCTURAL STEEL COMPONENTS INCLUDING DETAILS OF CUTS, CONNECTIONS, HOLES; WELDS; TYPE, SIZE AND LENGTH OF BOLTS; AND OTHER PERTINENT DATA.
   B. CURRENT WELDER'S CERTIFICATION OF EACH INDIVIDUAL PERFORMING WELDING WORK.
   C. MILL TEST REPORTS SIGNED BY MANUFACTURERS CERTIFYING THAT STRUCTURAL STEEL, BOLTS, AND OTHER COMPONENTS COMPLY WITH REQUIREMENTS.

SPECIAL INSPECTION:

A. CONTRACTOR SHALL PAY FOR AND BE RESPONSIBLE FOR ENSURING THAT SPECIAL INSPECTION OF PORTIONS OF THE WORK, AS REQUIRED BY THE BUILDING CODE OF THE COUNTY OF HAWAII, IS MADE AT THE APPROPRIATE TIME. THE CONTRACTOR SHALL GIVE TIMELY NOTICE OF WHEN AND WHERE INSPECTIONS ARE TO BE MADE AND PROVIDE ACCESS FOR THE INSPECTOR. THE CONTRACTOR SHALL CORRECT DEFECTIVE WORK AT NO ADDITIONAL COST TO THE STATE AND PAY FOR RE–INSPECTION.

B. THE FOLLOWING STRUCTURAL WORK REQUIRES SPECIAL INSPECTION:
   A. MASONRY CONSTRUCTION
   B. SPECIAL CASES – DRILLED AND EPOXIED THREADED RODS OR REINFORCING STEEL IN EXISTING FULLY GROUTED MASONRY OR CONCRETE

C. SPECIAL INSPECTION IS NOT REQUIRED FOR FOUNDATION CONCRETE AND REINFORCING STEEL. FOUNDATIONS WERE DESIGNED WITH F'C = 2,500 PSI.

D. THE SPECIAL INSPECTOR SHALL FURNISH INSPECTION REPORTS TO THE STATE, LICENSED ENGINEER OR ARCHITECT OF RECORD, AND OTHER STATE–DESIGNATED PERSONS. REPORTS SHALL INDICATE THAT WORK INSPECTED WAS DONE IN CONFORMANCE TO APPROVED CONSTRUCTION DOCUMENTS. THE SPECIAL INSPECTOR SHALL SUBMIT A FINAL SIGNED REPORT TO THE STATE AND LICENSED ENGINEER OR ARCHITECT OF RECORD, STATING WHETHER THE WORK REQUIRING SPECIAL INSPECTION WAS, TO THE BEST OF THE INSPECTOR'S KNOWLEDGE, IN CONFORMANCE TO THE APPROVED PLANS AND SPECIFICATIONS AND THE APPLICABLE WORKMANSHIP PROVISIONS OF THIS CODE. PRIOR TO THE FINAL INSPECTION REQUIRED UNDER THE BUILDING CODE SECTION 109.3.10 THE LICENSED ENGINEER OR ARCHITECT OF RECORD SHALL SUBMIT A WRITTEN STATEMENT VERIFYING RECEIPT OF THE FINAL INSPECTION REPORTS AND DOCUMENTING THAT THERE ARE NO UNRESOLVED CODE REQUIREMENTS THAT CREATE SIGNIFICANT PUBLIC SAFETY DEFICIENCIES.

E. CONTRACTOR SHALL SUBMIT A STATEMENT CONTAINING AN ACKNOWLEDGEMENT OF AWARENESS OF THE SPECIAL INSPECTION REQUIREMENTS CONTAINED ON THE DRAWINGS AND THAT THE CONSTRUCTION REQUIRING SPECIAL INSPECTIONS WILL BE MADE ACCESSIBLE FOR INSPECTIONS.

ABBREVIATIONS:

@	AT
ARCH	ARCHITECTURAL
BLW	BELOW
BOT	BOTTOM
CMU	CONCRETE MASONRY UNIT
CONC	CONCRETE
DBL	DOUBLE
DMG	DAMAGE
DWG	DRAWING
EQ	EQUAL
FTG	FOOTING
HORIZ	HORIZONTAL
MECH	MECHANICAL
REINF	REINFORCED OR REINFORCING
THK	THICK
TYP	TYPICAL
VERT	VERTICAL
w/	WITH

MINIMUM SPLICE & EMBEDMENT LENGTHS FOR CONCRETE

BAR SIZE	LAP SPLICE: BOT BAR OR WALL BAR	LAP SPLICE: TOP BAR	EMBEDMENT STRAIGHT: BOT BAR OR WALL BAR	EMBEDMENT STRAIGHT: TOP BAR	EMBEDMENT: W/ STD HOOK
#3, #4	29"	38"	22"	29"	11"
#5	36"	47"	28"	36"	14"
#6	43"	56"	33"	43"	17"
#7	63"	82"	48"	63"	20"
#8	72"	94"	55"	72"	22"
#9	81"	106"	62"	81"	25"

MINIMUM SPLICE & EMBEDMENT LENGTHS FOR MASONRY

BAR SIZE	LAP SPLICE: EDGE BAR	LAP SPLICE: CENTERED BAR	EMBEDMENT STRAIGHT: EDGE BAR	EMBEDMENT STRAIGHT: CENTERED BAR	EMBEDMENT: W/ STD HOOK
#3, #4	26"	24"	26"	24"	11"
#5	40"	30"	40"	30"	14"
#6	74"	36"	74"	36"	17"

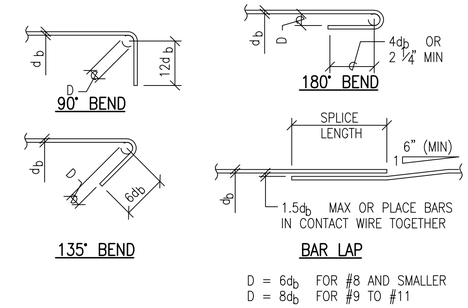

D = $6d_b$ FOR #8 AND SMALLER
D = $8d_b$ FOR #9 TO #11

NOTES:

1. LENGTHS ARE FOR CONCRETE BEAMS & COLUMNS WITH REBAR SPACED 1 BAR DIAMETER MIN OC. AND CONCRETE WALLS WITH REBARS SPACED 2 BAR DIAMETERS MIN OC INCREASE BAR LENGTH 50% FOR BARS SPACED CLOSER THAN MINIMUMS SPECIFIED.
2. "TOP BARS" ARE HORIZONTAL BARS WITH 12" OR MORE OF CONCRETE CAST BELOW.
3. BEND & HOOKS SHALL BE "STANDARD HOOKS" IN ACCORDANCE WITH ACI 318

1 / S–002 TYPICAL REBAR SPLICE & EMBEDMENT LENGTH SCHEDULE

NOT TO SCALE

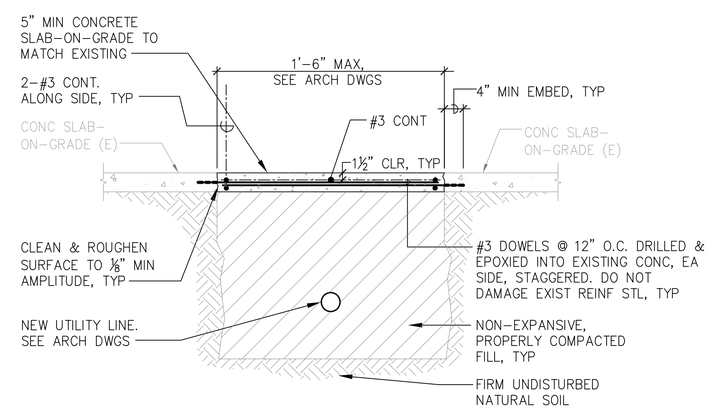

2 / S–002 CONC SLAB–ON–GRADE REPAIR DETAIL

SCALE: NOT TO SCALE

REVISION NO.	SYM.	DESCRIPTION	SHT./OF	DATE	APPROVED

BRENT K.K. CHING
LICENSED PROFESSIONAL ENGINEER
No. 17381–S
HAWAII U.S.A.

THIS LICENSE EXPIRES APRIL 30, 2024

SIGNATURE

THIS WORK WAS PREPARED BY ME OR UNDER MY SUPERVISION AND CONSTRUCTION OF THIS PROJECT WILL BE SUBJECT TO PROFESSIONAL ENGINEERING SERVICES DURING CONSTRUCTION AS DEFINED IN CHAPTER 16–115 OF THE HAWAII ADMINISTRATIVE RULES, DEPARTMENT OF COMMERCE AND CONSUMER AFFAIRS (ENTITLED PROFESSIONAL ENGINEERS, ARCHITECTS, SURVEYORS AND LANDSCAPE ARCHITECTS).

STATE OF HAWAII
DEPARTMENT OF LAND AND NATURAL RESOURCES
ENGINEERING DIVISION

HAWAII DISTRICT LAND OFFICE
HILO, HAWAI'I

GENERAL NOTES & TYPICAL DETAILS

DESIGNED: BC	SUBMITTED:
DRAWN: IB	DATE: NOV 2022
CHECKED: BC	SCALE: AS NOTED
APPROVED: CHIEF ENGINEER	Carty Chang E-signed 2022-11-28 04:17PM HST carty.s.chang@hawaii.gov State of Hawaii Chief Engineer
	DRAWING NO. S-002

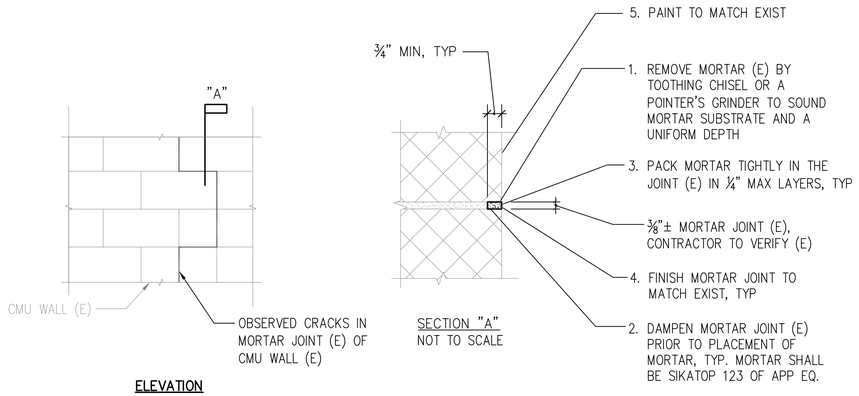

1 S-003 DETAIL
NOT TO SCALE

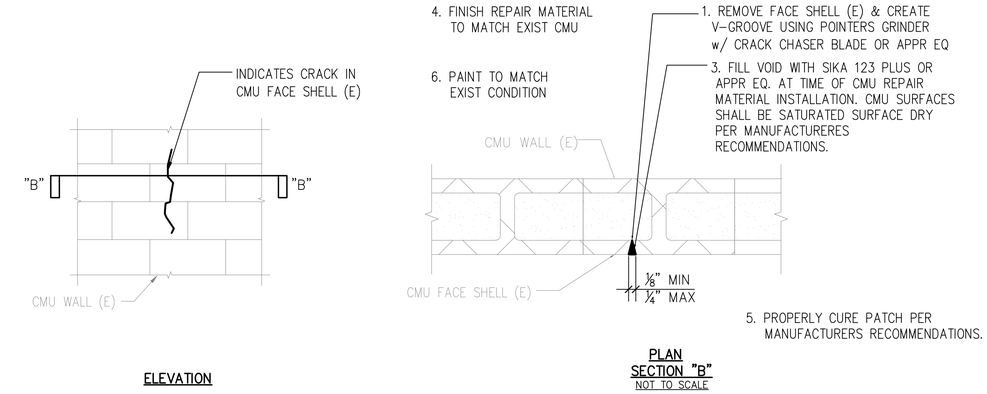

2 S-003 DETAIL
NOT TO SCALE

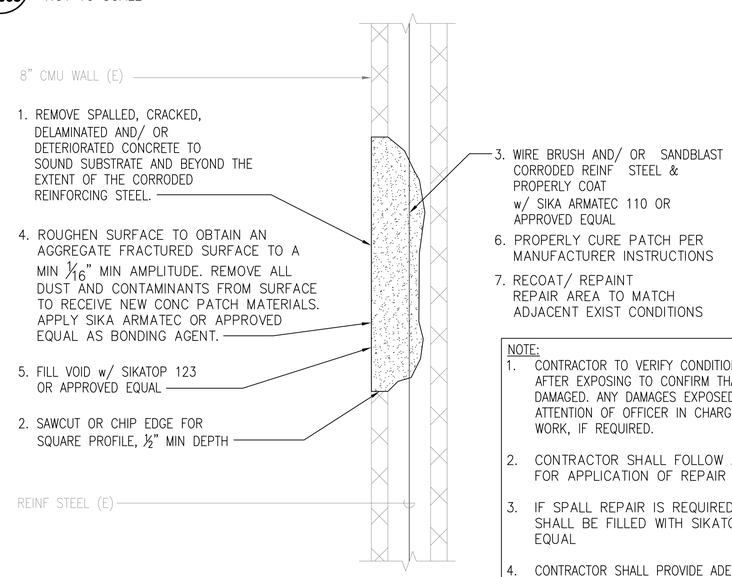

NOTE:
1. CONTRACTOR TO VERIFY CONDITION OF EXISTING REINFORCING STEEL AFTER EXPOSING TO CONFIRM THAT REINF STEEL IS SOUND AND NOT DAMAGED. ANY DAMAGES EXPOSED SHALL BE BROUGHT TO THE ATTENTION OF OFFICER IN CHARGE FOR ISSUE OF PROPER REMEDIAL WORK, IF REQUIRED.
2. CONTRACTOR SHALL FOLLOW ALL MANUFACTURER INSTRUCTIONS FOR APPLICATION OF REPAIR MORTARS AND BONDING AGENTS.
3. IF SPALL REPAIR IS REQUIRED TO BE FORMED & POURED, VOID SHALL BE FILLED WITH SIKATOP 111 PLUS, OR PRE-APPROVED EQUAL
4. CONTRACTOR SHALL PROVIDE ADEQUATE TEMPORARY SHORING PRIOR TO DEMOLITION OF ANY STRUCTURAL ELEMENT OR PORTION THEREOF.
5. PROVIDE APPROPRIATE LEAVE-IN-PLACE MATERIAL TO PREVENT FLOW OF EXCESS REPAIR MORTAR INTO ADJACENT HOLLOW CELLS AS NEEDED.

3 S-003 SECTION
NOT TO SCALE

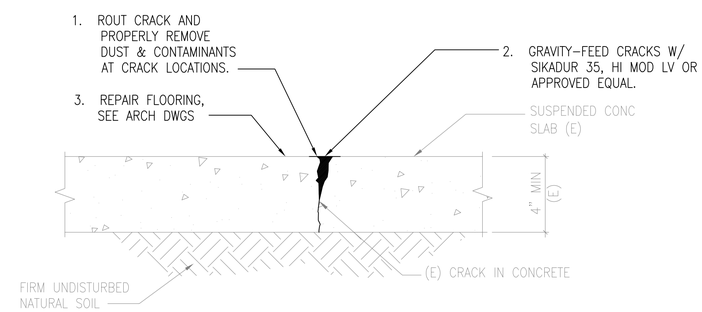

4 S-003 CONC SLAB-ON-GRADE CRACK REPAIR
NOT TO SCALE

REVISION NO.	SYM.	DESCRIPTION	SHT./OF	DATE	APPROVED

BRENT K.K. CHING
LICENSED PROFESSIONAL ENGINEER
No. 17381-S
HAWAII U.S.A.

THIS LICENSE EXPIRES APRIL 30, 2024

SIGNATURE

THIS WORK WAS PREPARED BY ME OR UNDER MY SUPERVISION AND CONSTRUCTION OF THIS PROJECT WILL BE UNDER MY OBSERVATION, (OBSERVATION OF CONSTRUCTION AS DEFINED IN CHAPTER 16-115 OF THE STATE OF HAWAII DEPARTMENT OF BUSINESS, ECONOMIC DEVELOPMENT AND TOURISM, DIVISION OF COMMERCE AND CONSUMER AFFAIRS ENTITLED PROFESSIONAL ENGINEERS, ARCHITECTS, SURVEYORS AND LANDSCAPE ARCHITECTS).

STATE OF HAWAII
DEPARTMENT OF LAND AND NATURAL RESOURCES
ENGINEERING DIVISION

HAWAII DISTRICT LAND OFFICE
HILO, HAWAI'I

GENERAL NOTES & TYPICAL DETAILS

DESIGNED: BC	SUBMITTED:
DRAWN: IB	DATE: NOV 2022
CHECKED: BC	SCALE: AS NOTED
APPROVED: CHIEF ENGINEER	Carty Chang E-signed 2022-11-28 04:17PM HST carty.s.chang@hawaii.gov State of Hawaii Chief Engineer

DRAWING NO. S-003

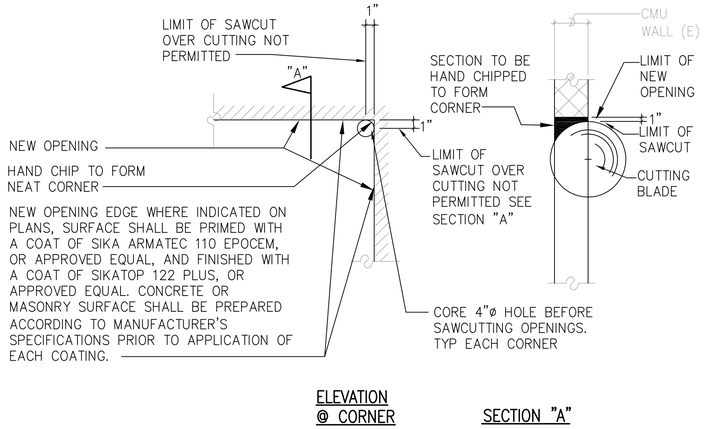

1 S-004 TYPICAL SAWCUT DETAIL

NOT TO SCALE

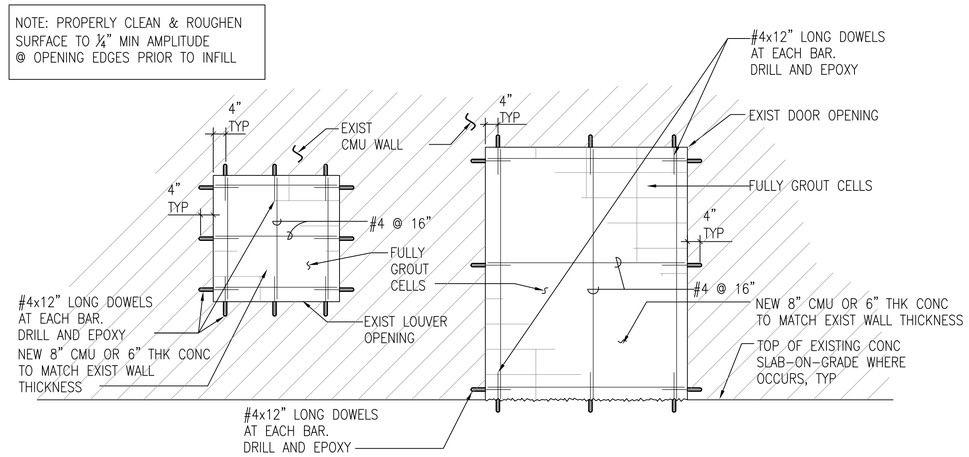

2 S-004 TYPICAL CMU WALL INFILL DETAIL

NOT TO SCALE

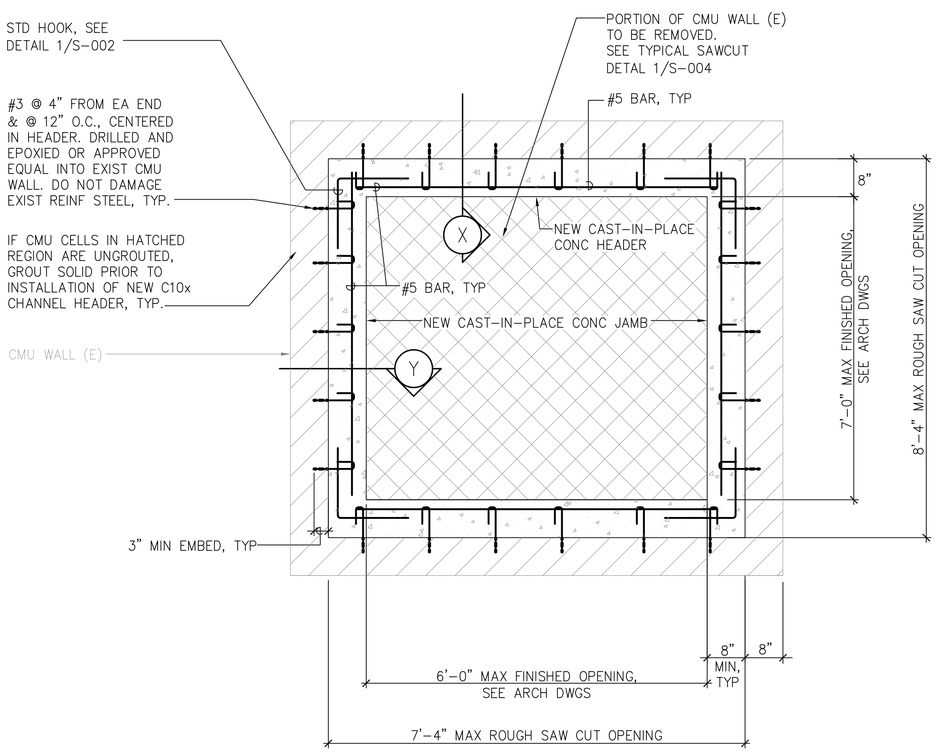

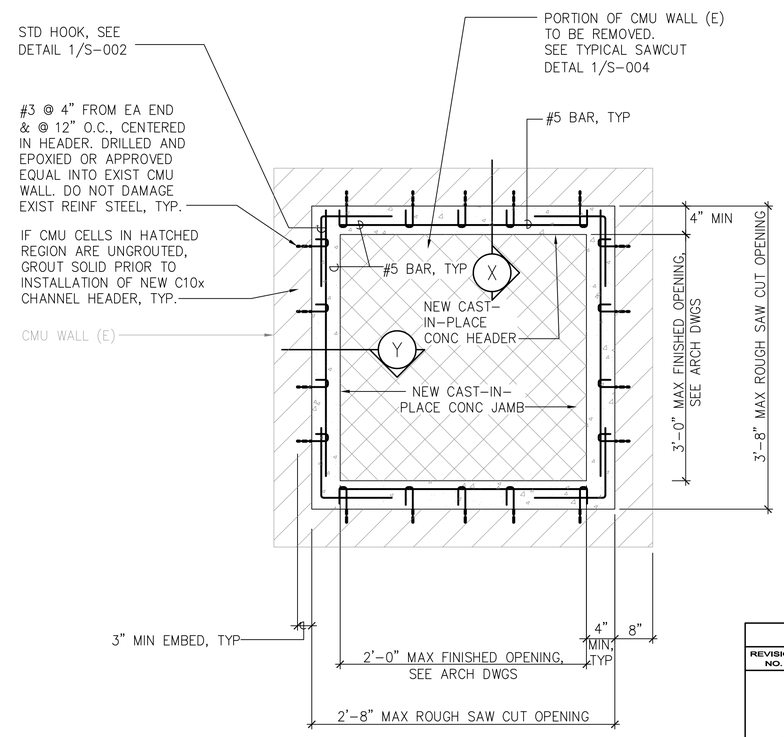

3 S-004 TYPICAL OPENING REINFORCING DETAIL

NOT TO SCALE

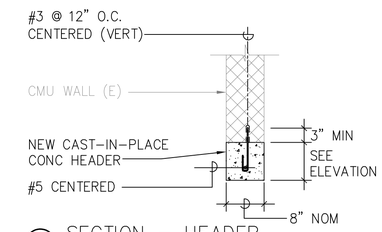

X SECTION – HEADER

NOT TO SCALE

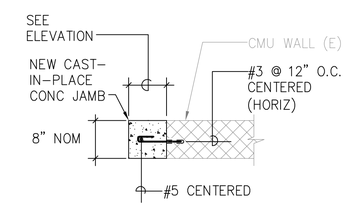

Y SECTION – JAMB

NOT TO SCALE

REVISION NO.	SYM.	DESCRIPTION	SHT./OF	DATE	APPROVED

BRENT K.K. CHING
LICENSED PROFESSIONAL ENGINEER
No. 17381-S
HAWAII U.S.A.

THIS LICENSE EXPIRES APRIL 30, 2024

SIGNATURE

THIS WORK WAS PREPARED BY ME OR UNDER MY SUPERVISION AND EXPERIENCE. DESIGN OF THIS PROJECT WILL BE UNDER MY OBSERVATION. OBSERVATION OF CONSTRUCTION AS DEFINED IN CHAPTER 16-115 OF THE HAWAII ADMINISTRATIVE RULES, DEPARTMENT OF COMMERCE AND CONSUMER AFFAIRS ENTITLED PROFESSIONAL ENGINEERS, ARCHITECTS, SURVEYORS AND LANDSCAPE ARCHITECTS).

STATE OF HAWAII
DEPARTMENT OF LAND AND NATURAL RESOURCES
ENGINEERING DIVISION

HAWAII DISTRICT LAND OFFICE
HILO, HAWAI'I

TYPICAL DETAILS

DESIGNED: BC	SUBMITTED:
DRAWN: IB	DATE: NOV 2022
CHECKED: BC	SCALE: AS NOTED
APPROVED:	Carty Chang E-signed 2022-11-28 04:17PM HST carty.s.chang@hawaii.gov State of Hawaii Chief Engineer
CHIEF ENGINEER	

DRAWING NO. S-004

METAL ROOF DECK SCHEDULE				
TYPE GAGE	MINIMUM SECTION PROPERTIES			SECTION
	I in^4/FT	$+Sin^3/FT$	$-Sin^3/FT$	
1½" VERCO/ PLB-36 22 GA ROOF DECK OR APPROVED EQUAL	0.192	0.176	0.188	1½"

NOTES:

1. SEE PLANS FOR EXTENT AND ORIENTATION OF METAL DECK.
2. SEE 3/S-005 FOR METAL ROOF DECK FASTENING TO SUPPORTS

1 S-005 METAL ROOF DECK SCHEDULE

NOT TO SCALE

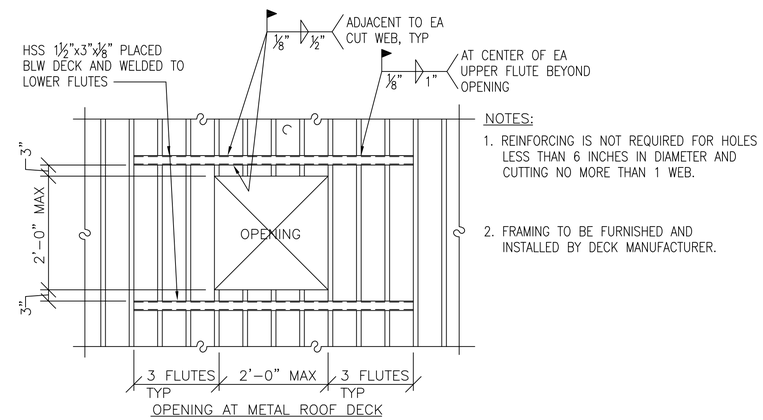

OPENING AT METAL ROOF DECK

NOTES:

1. REINFORCING IS NOT REQUIRED FOR HOLES LESS THAN 6 INCHES IN DIAMETER AND CUTTING NO MORE THAN 1 WEB.
2. FRAMING TO BE FURNISHED AND INSTALLED BY DECK MANUFACTURER.

2 S-005 TYPICAL OPENING AT ROOF DECK

NOT TO SCALE

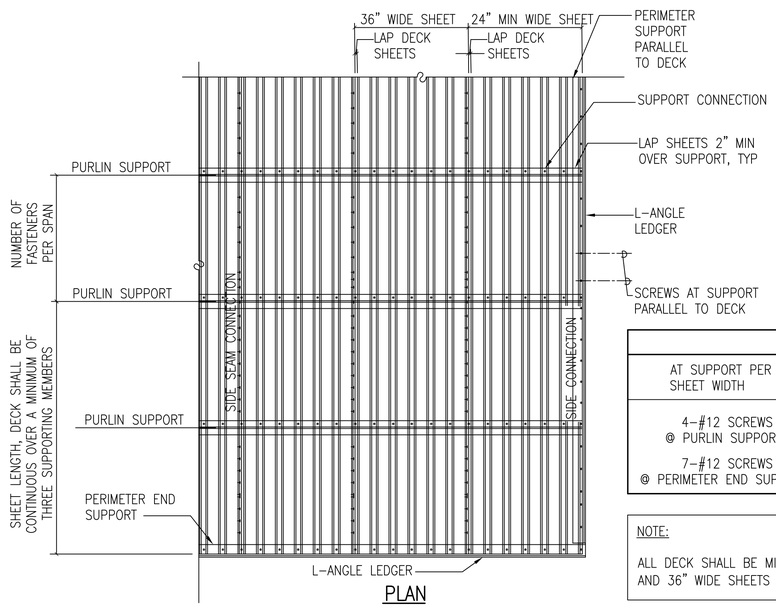

PLAN

DIAPHRAGM CONNECTION		
AT SUPPORT PER 36" SHEET WIDTH	SIDE LAP CONNECTION	AT SUPPORT PARALLEL TO DECK
4-#12 SCREWS @ PURLIN SUPPORTS 7-#12 SCREWS @ PERIMETER END SUPPORTS	VSC2 @ 24" OC (OR APPROVED EQUAL)	#12 SCREWS @ 6" OC

NOTE:

ALL DECK SHALL BE MINIMUM 3 SPAN CONTINUOUS CONDITION AND 36" WIDE SHEETS AND GALVANIZED

3 S-005 TYPICAL METAL ROOF DECK FASTENING SCHEDULE

NOT TO SCALE

REVISION NO.	SYM.	DESCRIPTION	SHT./OF	DATE	APPROVED

BRENT K.K. CHANG
LICENSED PROFESSIONAL ENGINEER
No. 17381-S
HAWAII U.S.A.

THIS LICENSE EXPIRES APRIL 30, 2024

SIGNATURE

THIS WORK WAS PREPARED BY ME OR UNDER MY SUPERVISION AND CONSTRUCTION OF THIS PROJECT WILL BE UNDER MY OBSERVATION. OBSERVATION OF CONSTRUCTION AS DEFINED IN CHAPTER 16-115 OF THE HAWAII ADMINISTRATIVE RULES, DEPARTMENT OF COMMERCE AND CONSUMER AFFAIRS ENTITLED "PROFESSIONAL ENGINEERS, ARCHITECTS, SURVEYORS AND LANDSCAPE ARCHITECTS".

STATE OF HAWAII
DEPARTMENT OF LAND AND NATURAL RESOURCES
ENGINEERING DIVISION

HAWAII DISTRICT LAND OFFICE
HILO, HAWAI'I

TYPICAL DETAILS

DESIGNED: BC	SUBMITTED:
DRAWN: IB	DATE: NOV 2022
CHECKED: BC	SCALE: AS NOTED
APPROVED:	DRAWING NO. S-005
CHIEF ENGINEER	

Carty Chang
E-signed 2022-11-28 04:17PM HST
carty.s.chang@hawaii.gov
State of Hawaii
Chief Engineer

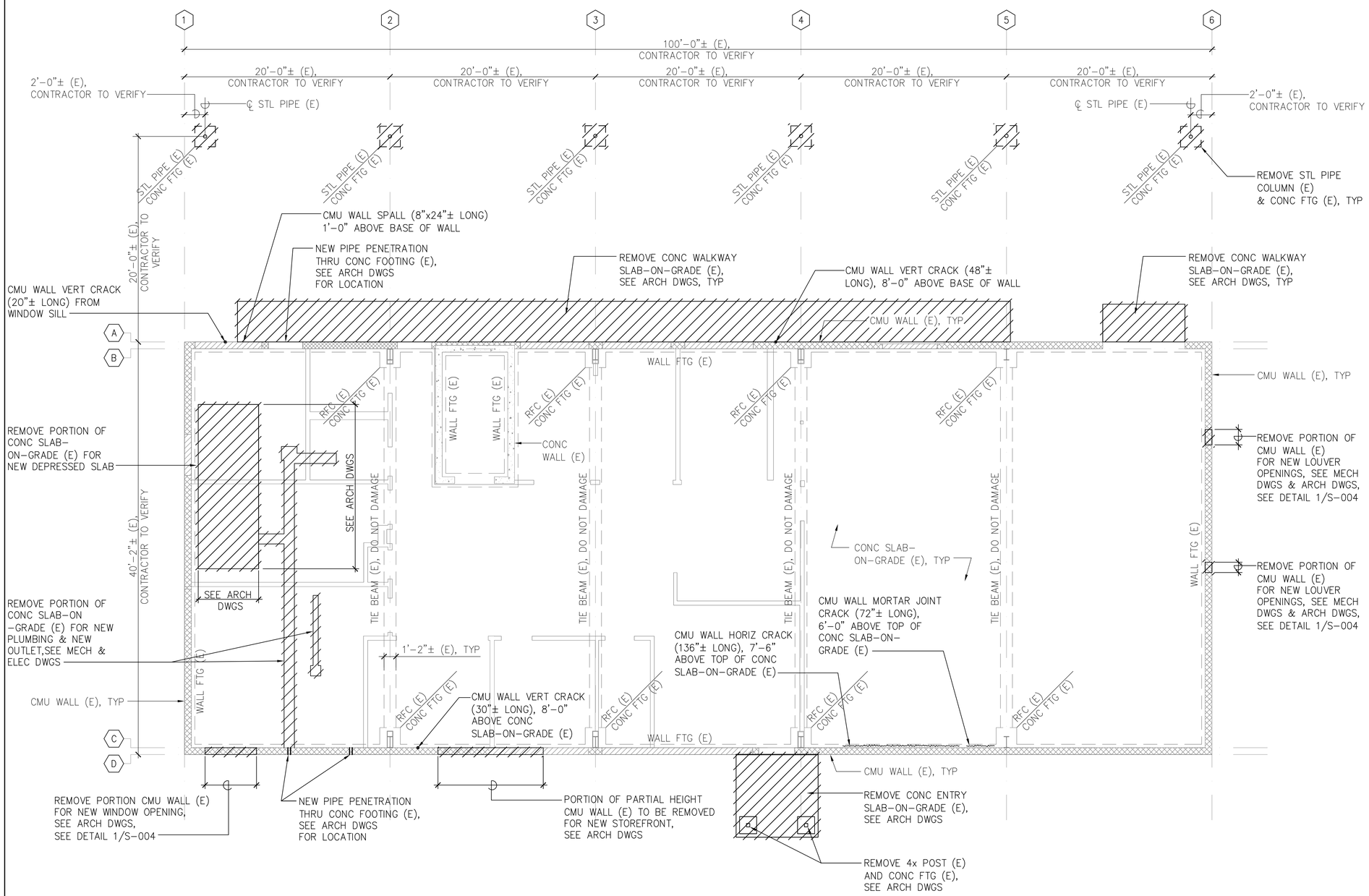

LEGEND:

- INDICATES EXIST FULL HEIGHT CMU WALLS
- INDICATES EXIST PARTIAL HEIGHT CMU WALLS
- INDICATES EXIST NON STRUCTURAL WALLS
- INDICATES EXIST FULL HEIGHT CONC WALLS
- RFC (E) INDICATES EXIST RIGID FRAME COLUMN
- INDICATES DEPRESSED SLAB OR CHANGE IN SLAB ELEVATION. SEE ARCH DWGS
- INDICATES APPROXIMATE LOCATION & EXTENT OF DEMOLITION, SEE ARCH DWGS

NOTE:

LOCATIONS AND SIZES OF EXISTING DAMAGES ARE APPROXIMATE. THE CONTRACTOR SHALL PERFORM A SURVEY OF EXISTING DAMAGES AND REPORT TO THE ARCHITECT ANY DEVIATIONS OR ADDITIONAL DAMAGES NOT SHOWN.

EXISTING FOUNDATION DEMOLITION PLAN

SCALE: 3/16" = 1'-0"

0 2' 4' 6' 8' 10 12'

SCALE: 3/16" = 1'-0"

WEST SOUTH NORTH EAST

REVISION NO.	SYM.	DESCRIPTION	SHT./OF	DATE	APPROVED

BRENT K.K. CHING
LICENSED PROFESSIONAL ENGINEER
No. 17381-S
HAWAII U.S.A.

THIS LICENSE EXPIRES APRIL 30, 2024

SIGNATURE

THIS WORK WAS PREPARED BY ME OR UNDER MY SUPERVISION AND CONSTRUCTION OF THIS PROJECT WILL BE UNDER MY OBSERVATION. (OBSERVATION OF CONSTRUCTION AS DEFINED IN CHAPTER 16-115 OF THE HAWAII ADMINISTRATIVE RULES, DEPARTMENT OF COMMERCE AND CONSUMER AFFAIRS ENTITLED PROFESSIONAL ENGINEERS, ARCHITECTS, SURVEYORS AND LANDSCAPE ARCHITECTS).

STATE OF HAWAII
DEPARTMENT OF LAND AND NATURAL RESOURCES
ENGINEERING DIVISION

HAWAII DISTRICT LAND OFFICE
HILO, HAWAI'I

EXISTING FOUNDATION DEMOLITION PLAN

DESIGNED: BC	SUBMITTED:
DRAWN: IB	DATE: NOV 2022
CHECKED: BC	SCALE: AS NOTED
APPROVED: CHIEF ENGINEER	Carty Chang E-signed 2022-11-28 04:17PM HST carty.s.chang@hawaii.gov State of Hawaii Chief Engineer

DRAWING NO. S-101

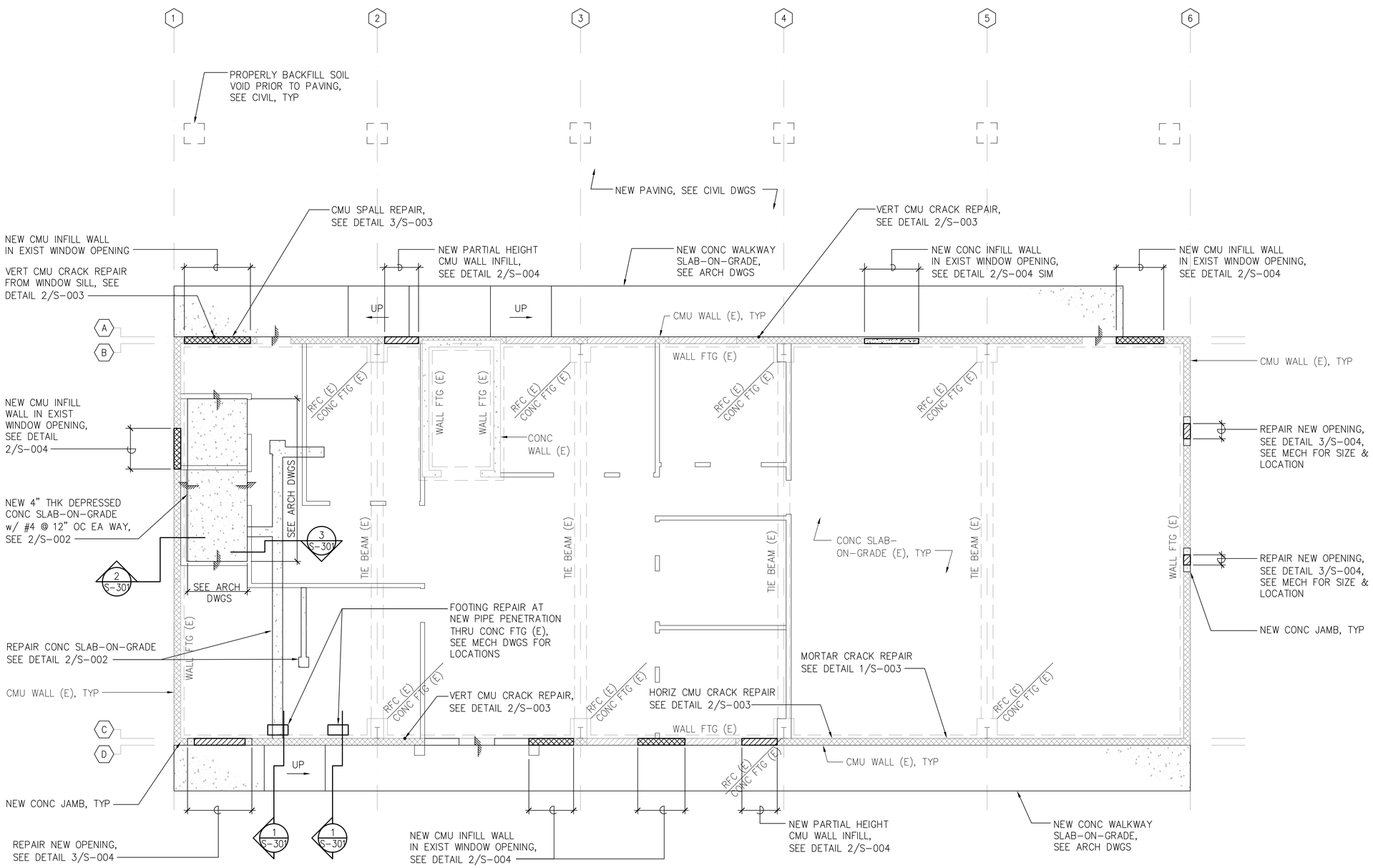

LEGEND:

- INDICATES EXIST FULL HEIGHT CMU WALLS
- INDICATES EXIST PARTIAL HEIGHT CMU WALLS
- INDICATES NEW NON STRUCTURAL WALLS
- INDICATES EXIST FULL HEIGHT CONC WALLS
- INDICATES NEW CMU WALL INFILL
- INDICATES NEW CMU WALL OPENING OR NEW PARTIAL HEIGHT CMU WALL
- RFC (E) INDICATES EXIST RIGID FRAME COLUMN
- INDICATES DEPRESSED SLAB OR CHANGE IN SLAB ELEVATION. SEE ARCH DWGS
- INDICATES NEW CONC INFILL WALL OR CONC JAMB

NOTE:

LOCATIONS AND SIZES OF EXISTING DAMAGES ARE APPROXIMATE. THE CONTRACTOR SHALL PERFORM A SURVEY OF EXISTING DAMAGES AND REPORT TO THE ARCHITECT ANY DEVIATIONS OR ADDITIONAL DAMAGES NOT SHOWN.

EXISTING FOUNDATION RENOVATION PLAN

SCALE: 3/16" = 1'-0"

0 2' 4' 6' 8' 10 12'

SCALE: 3/16" = 1'-0"

WEST SOUTH NORTH EAST

REVISION NO.	SYM.	DESCRIPTION	SHT./OF	DATE	APPROVED

BRENT K.K. CHING
LICENSED PROFESSIONAL ENGINEER
No. 17381-S
HAWAII U.S.A.

THIS LICENSE EXPIRES APRIL 30, 2024

SIGNATURE

THIS WORK WAS PREPARED BY ME OR UNDER MY SUPERVISION AND PRESENTATION OF THIS PROJECT WILL BE UNDER MY OBSERVATION, OBSERVATION OF CONSTRUCTION AS DEFINED IN CHAPTER 16-115 OF THE HAWAII ADMINISTRATIVE RULES, DEPARTMENT OF COMMERCE AND CONSUMER AFFAIRS ENTITLED PROFESSIONAL ENGINEERS, ARCHITECTS, SURVEYORS AND LANDSCAPE ARCHITECTS).

STATE OF HAWAII
DEPARTMENT OF LAND AND NATURAL RESOURCES
ENGINEERING DIVISION

HAWAII DISTRICT LAND OFFICE
HILO, HAWAI'I

EXISTING FOUNDATION RENOVATION PLAN

DESIGNED: BC	SUBMITTED:
DRAWN: IB	DATE: NOV 2022
CHECKED: BC	SCALE: AS NOTED
APPROVED:	Carty Chang E-signed 2022-11-28 04:17PM HST carty.s.chang@hawaii.gov State of Hawaii Chief Engineer
CHIEF ENGINEER	

DRAWING NO. S-102

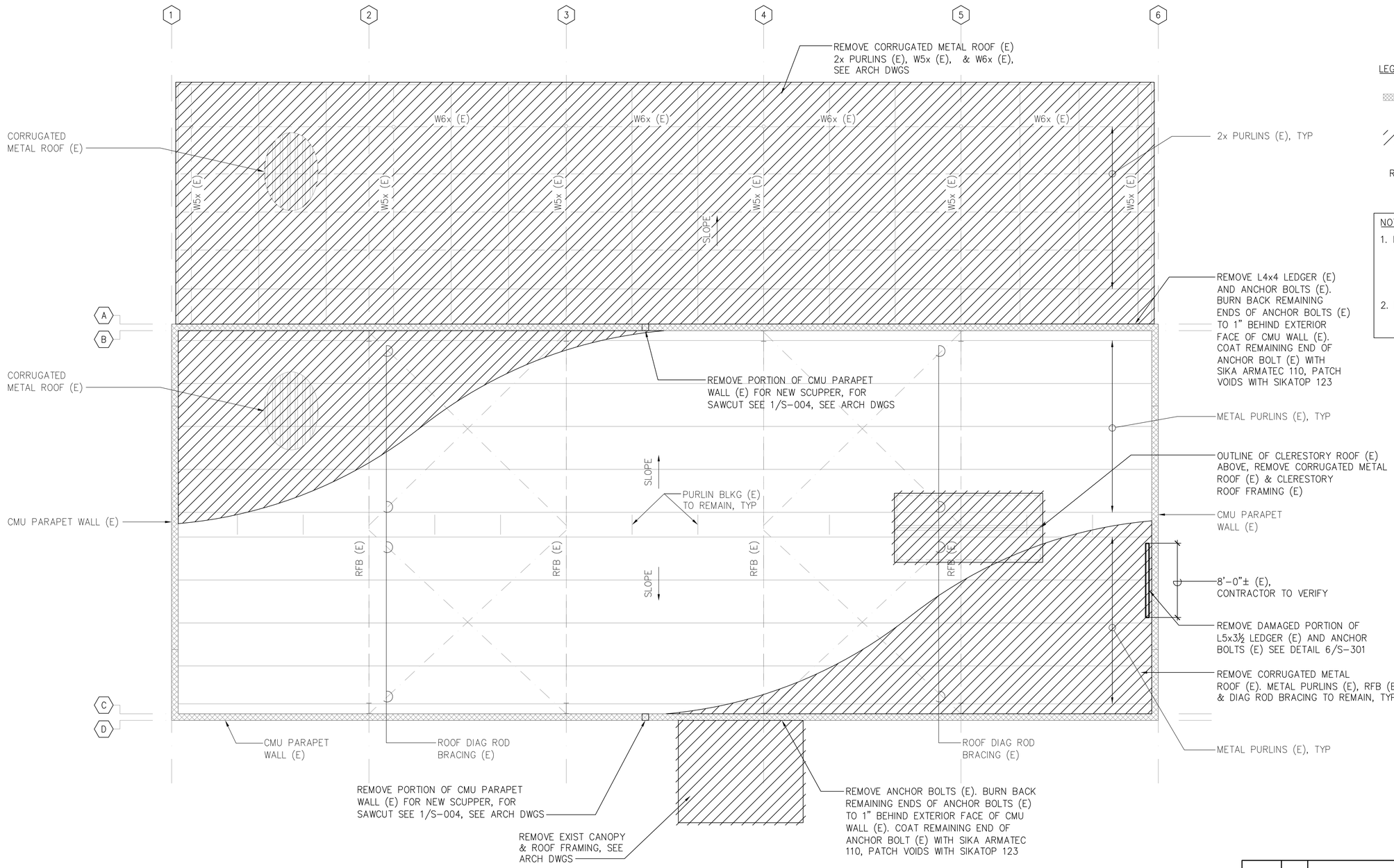

LEGEND:

INDICATES EXIST CMU PARAPET WALL

INDICATES PORTION OF EXISTING BUILDING TO BE DEMOLISHED

RFB (E) INDICATES EXIST RIGID FRAME BEAM

NOTES:

1. PROVIDE ADEQUATE TEMPORARY LATERAL BRACING OF EXISTING MASONRY WALLS DURING REMOVAL OF EXISTING METAL ROOF AND INSTALLATION OF NEW METAL ROOF DECK.
2. DO NOT DAMAGE EXIST METAL PURLINS, EXIST RIGID FRAME BEAMS, AND EXIST DIAGONAL ROD BRACING TO REMAIN.

EXISTING ROOF FRAMING DEMOLITION PLAN

SCALE: 3/16" = 1'-0"

0 2' 4' 6' 8' 10 12'

SCALE: 3/16" = 1'-0"

WEST SOUTH NORTH EAST

REVISION NO.	SYM.	DESCRIPTION	SHT./OF	DATE	APPROVED

BRENT K.K. CHING
LICENSED PROFESSIONAL ENGINEER
No. 17381-S
HAWAII U.S.A.

THIS LICENSE EXPIRES APRIL 30, 2024

SIGNATURE

THIS WORK WAS PREPARED BY ME, OR UNDER MY SUPERVISION AND CONSTRUCTION OF THIS PROJECT WILL BE SUPERVISED BY ONE OR MORE OF THE PROFESSIONAL ENGINEERS, ARCHITECTS, SURVEYORS AND CONSTRUCTION AS DEFINED IN CHAPTER 16-115 OF THE HAWAII ADMINISTRATIVE RULES, DEPARTMENT OF COMMERCE AND CONSUMER AFFAIRS ENTITLED PROFESSIONAL ENGINEERS, ARCHITECTS, SURVEYORS AND LANDSCAPE ARCHITECTS).

STATE OF HAWAII
DEPARTMENT OF LAND AND NATURAL RESOURCES
ENGINEERING DIVISION

HAWAII DISTRICT LAND OFFICE

HILO, HAWAI'I

EXISTING ROOF FRAMING DEMOLITION PLAN

DESIGNED: BC	SUBMITTED:
DRAWN: IB	DATE: NOV 2022
CHECKED: BC	SCALE: AS NOTED
APPROVED: CHIEF ENGINEER	Carty Chang E-signed 2022-11-28 04:17PM HST carty.s.chang@hawaii.gov State of Hawaii Chief Engineer

DRAWING NO. S-201

PV SYSTEM– ADDITIVE BID NO.1:

NOTES:

1. SELF–WEIGHT OF NEW ROOF MOUNTED PV SYSTEM SHALL NOT EXCEED 5 PSF NOR 5,000 LBS TOTAL INCLUDING PV PANELS, MOUNTING HARDWARE, & COMPONENTS.
2. CONTRACTOR SHALL SUBMIT PV SYSTEM SPECIFICATIONS, LAYOUT, AND MOUNTING

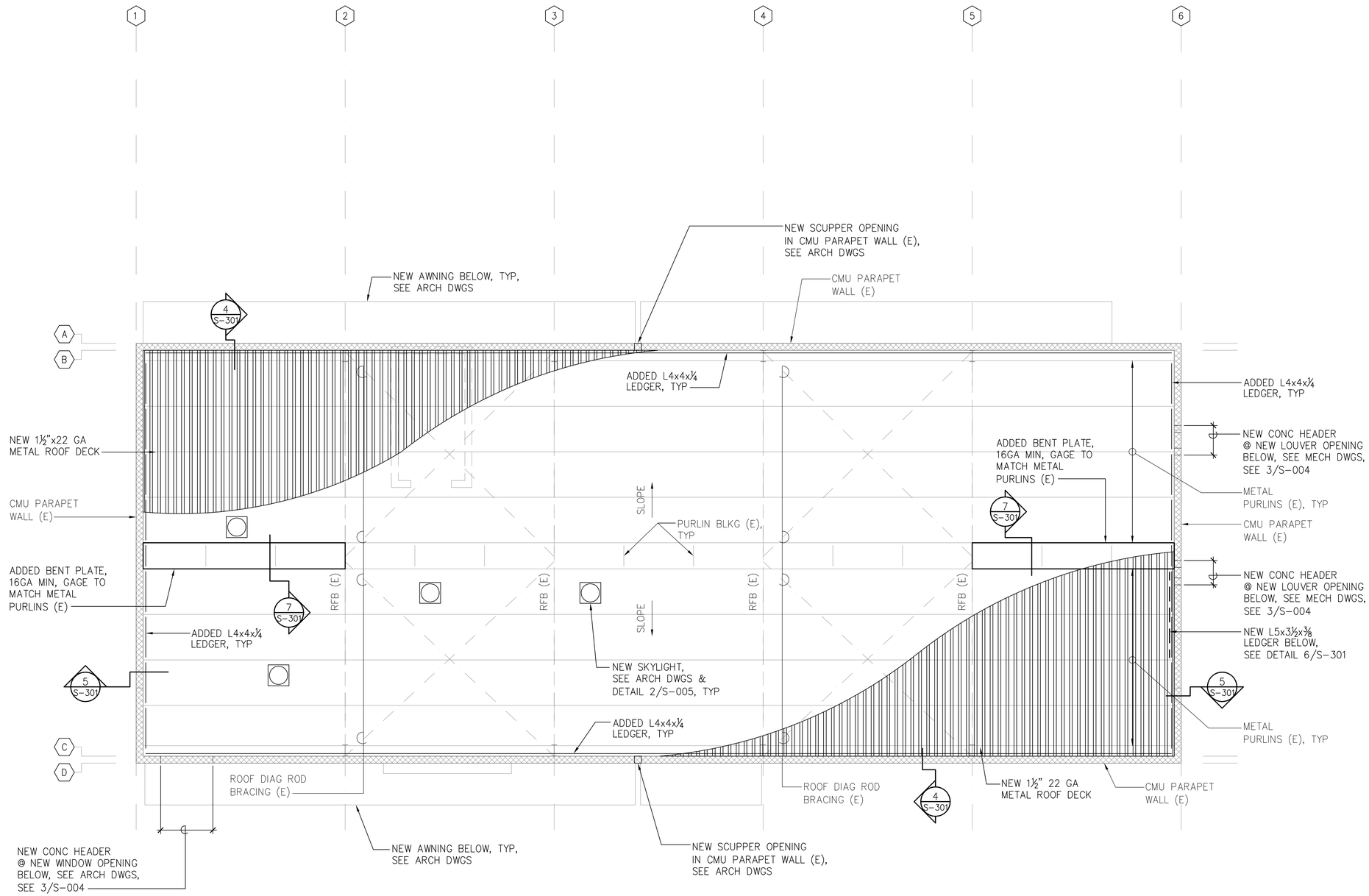

LEGEND:

▒	INDICATES EXIST CMU PARAPET WALL
RFB	INDICATES EXIST RIGID FRAME BEAM

NOTE:
FOR METAL ROOF DECK SCHEDULE, FASTENING SCHEDULE, AND TYPICAL DETAILS, SEE SHEET S–004.

EXISTING ROOF FRAMING RENOVATION PLAN

SCALE: 3/16" = 1'–0"

0 2' 4' 6' 8' 10 12'

SCALE: 3/16" = 1'–0"

WEST SOUTH NORTH EAST

REVISION NO.	SYM.	DESCRIPTION	SHT./OF	DATE	APPROVED

BRENT K.K. CHING
LICENSED PROFESSIONAL ENGINEER
No. 17381–S
HAWAII U.S.A.

THIS LICENSE EXPIRES APRIL 30, 2024

SIGNATURE

THIS WORK WAS PREPARED BY ME OR UNDER MY SUPERVISION AND CONSTRUCTION OF THIS PROJECT WILL BE UNDER MY OBSERVATION. (OBSERVATION OF CONSTRUCTION AS DEFINED IN CHAPTER 16–115 OF THE HAWAII ADMINISTRATIVE RULES, DEPT. OF BUSINESS, COMMERCE, AND CONSUMER AFFAIRS, ENTITLED PROFESSIONAL ENGINEERS, ARCHITECTS, SURVEYORS AND LANDSCAPE ARCHITECTS).

STATE OF HAWAII
DEPARTMENT OF LAND AND NATURAL RESOURCES
ENGINEERING DIVISION

HAWAII DISTRICT LAND OFFICE

HILO, HAWAI'I

EXISTING ROOF FRAMING RENOVATION PLAN

DESIGNED: BC	SUBMITTED:
DRAWN: IB	DATE: NOV 2022
CHECKED: BC	SCALE: AS NOTED
APPROVED: Carty Chang E-signed 2022-11-28 04:17PM HST carty.s.chang@hawaii.gov State of Hawaii Chief Engineer	DRAWING NO. S-202
CHIEF ENGINEER	

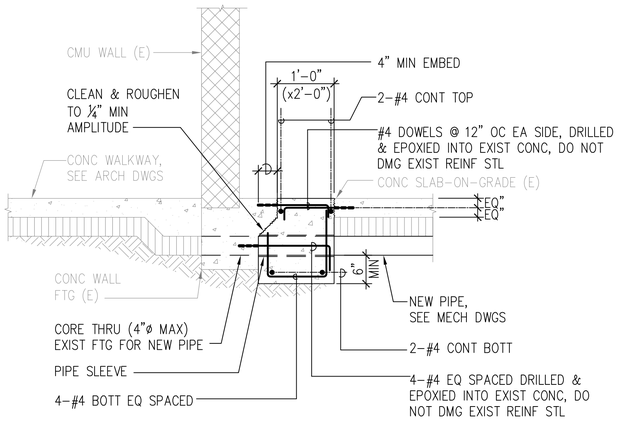

1 S-301 SECTION
SCALE: 3/4"=1'-0"
0 1' 2' 4'
SCALE: 3/4" = 1'-0"

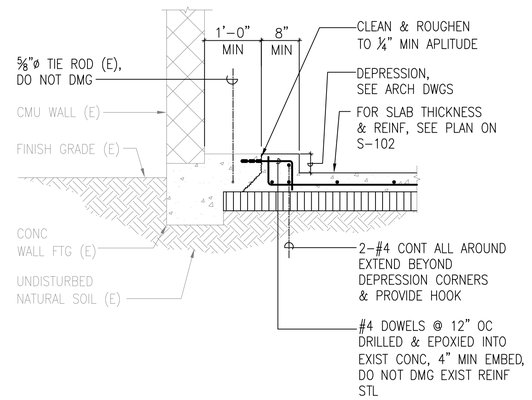

2 S-301 SECTION
SCALE: 3/4"=1'-0"
0 1' 2' 4'
SCALE: 3/4" = 1'-0"

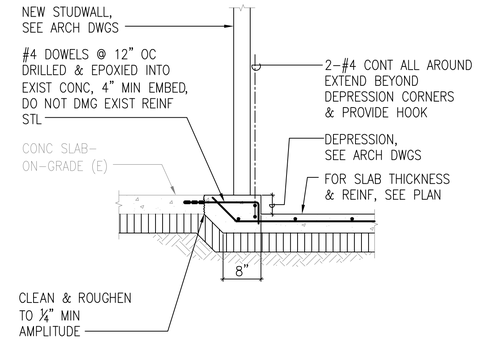

3 S-301 SECTION
SCALE: 3/4"=1'-0"
0 1' 2' 4'
SCALE: 3/4" = 1'-0"

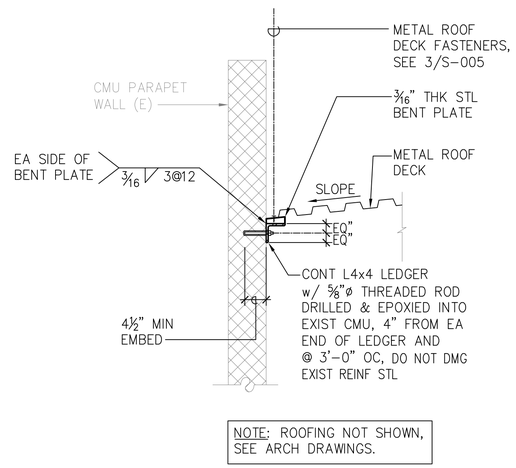

4 S-301 SECTION
SCALE: 3/4"=1'-0"
0 1' 2' 4'
SCALE: 3/4" = 1'-0"

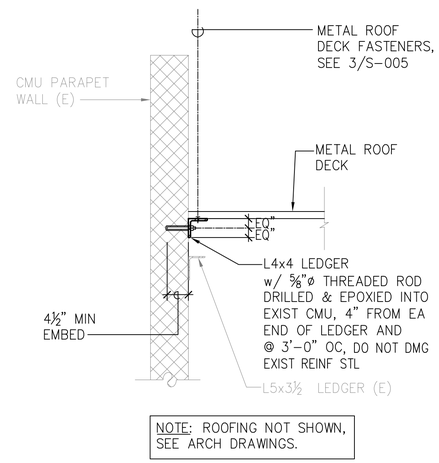

5 S-301 SECTION
SCALE: 3/4"=1'-0"
0 1' 2' 4'
SCALE: 3/4" = 1'-0"

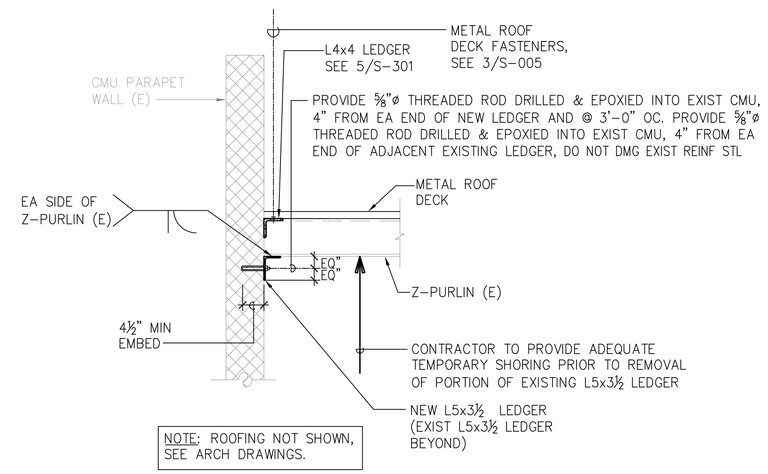

6 S-301 SECTION
SCALE: 3/4"=1'-0"
0 1' 2' 4'
SCALE: 3/4" = 1'-0"

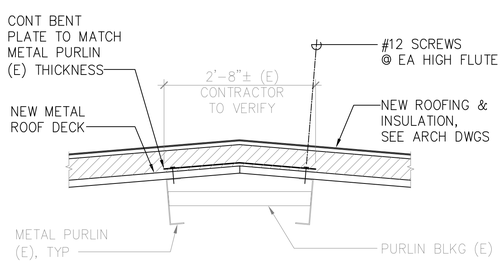

7 S-301 SECTION
SCALE: 3/4"=1'-0"
0 1' 2' 4'
SCALE: 3/4" = 1'-0"

REVISION NO.	SYM.	DESCRIPTION	SHT./OF	DATE	APPROVED

BRENT K.K. CHANG
LICENSED PROFESSIONAL ENGINEER
No. 17381-S
HAWAII U.S.A.

THIS LICENSE EXPIRES APRIL 30, 2024

SIGNATURE

THIS WORK WAS PREPARED BY ME OR UNDER MY SUPERVISION AND CONSTRUCTION OF THIS PROJECT WILL BE UNDER MY OBSERVATION. (OBSERVATION OF CONSTRUCTION AS DEFINED IN CHAPTER 16-115 OF THE STATE BOARD OF PROFESSIONAL ENGINEERS, ARCHITECTS, LANDSCAPE ARCHITECTS, AND CONSUMER AFFAIRS ENTITLED PROFESSIONAL ENGINEERS, ARCHITECTS, SURVEYORS AND LANDSCAPE ARCHITECTS).

STATE OF HAWAII
DEPARTMENT OF LAND AND NATURAL RESOURCES
ENGINEERING DIVISION

HAWAII DISTRICT LAND OFFICE
HILO, HAWAI'I

SECTIONS

DESIGNED: BC | SUBMITTED:
DRAWN: IB | DATE: NOV 2022
CHECKED: BC | SCALE: AS NOTED
APPROVED: | DRAWING NO. S-301

Carty Chang
E-signed 2022-11-28 04:17PM HST
carty.s.chang@hawaii.gov
State of Hawaii
Chief Engineer

CHIEF ENGINEER

GENERAL NOTES:

1. CONFORM TO ALL REQUIREMENTS OF THE 2018 IBC, 2018 UPC, 2018 IECC AND 2012 NFPA 1 CODES OF THE COUNTY OF HAWAII, STATE OF HAWAII HEALTH REGULATIONS, FIRE DEPARTMENT REGULATIONS, MANUFACTURER'S RECOMMENDATIONS AND OTHER APPLICABLE REGULATIONS.
2. EXAMINE ALL PROJECT PLANS AND BECOME FAMILIAR WITH ALL EXISTING CONDITIONS AND THE EXTENT OF REMOVAL, RELOCATION AND/OR NEW WORK PRIOR TO BIDDING. NOTIFY AND COORDINATE WITH THE ARCHITECT/ENGINEER FOR ANY MAJOR DEVIATIONS OR DISCREPANCIES DISCOVERED IN THE PLANS AND SPECIFICATIONS DUE TO UNFORESEEN OR VARYING FIELD CONDITIONS.
3. INSTALLATION SHALL BE GUARANTEED TO BE FREE FROM DEFECTS FOR ONE YEAR FROM FINAL DATE OF ACCEPTANCE OF THE PROJECT AS A WHOLE.
4. CONTRACTOR SHALL VERIFY ALL FIELD CONDITIONS PRIOR TO BID AND CONSTRUCTION
5. CONTRACTOR SHALL FIELD VERIFY ALL EXISTING LINE SIZES, CONDITIONS, AND INVERTS PRIOR TO BID AND CONSTRUCTION.
6. THE DRAWINGS AND SPECIFICATIONS ARE INTENDED TO COVER THE COMPLETE INSTALLATION OF SYSTEMS TO FUNCTION AS DESCRIBED AND SPECIFIED. THE OMISSION OF REFERENCE TO ANY NECESSARY ITEM OF LABOR OR MATERIAL SHALL NOT RELIEVE THE CONTRACTOR FROM PROVIDING SUCH LABOR AND MATERIAL AT NO ADDITIONAL COST TO THE STATE.
7. CONTRACTOR SHALL PAY FOR ALL PERMITS AND APPLICATIONS.
8. CAULK ALL PENETRATIONS WATERTIGHT. PROVIDE ALL CUTTING, PATCHING, AND RESTORING OF EXISTING SURFACES TO MATCH ORIGINAL SURFACE FINISHES. SPOT PAINT TO MATCH EXISTING SURFACES/COLOR.
9. PREPARE SIX (6) SETS OF SHOP DRAWINGS SUBMITTED TO THE ENGINEER FOR APPROVAL PRIOR TO THE START OF WORK. NO REPRODUCTIONS OF ANY KIND OF THE CONTRACT DOCUMENTS SHALL BE ACCEPTABLE AS SHOP DRAWINGS. PROVIDE ONE SET OF REPRODUCIBLE AS-BUILT DRAWINGS SHOWING THE ACTUAL INSTALLED CONDITIONS AND SUBMIT TO THE STATE UPON COMPLETION OF WORK.
10. ALL EQUIPMENT AND FIXTURES SHALL BE CAPABLE OF FITTING INTO THE SPACES ALLOTTED WHILE MEETING THE MANUFACTURER'S RECOMMENDED ACCESS REQUIREMENTS. REVIEW ALL SPACES WHERE EQUIPMENT AND FIXTURES ARE TO BE INSTALLED PRIOR TO ORDERING OF ITEMS AND NOTIFY THE ARCHITECT/ENGINEER OF ANY INADEQUATE CLEARANCES OR CONDITIONS THAT WILL PREVENT THE PROPER INSTALLATION, MAINTENANCE, AND OPERATION OF THE EQUIPMENT AND FIXTURES.
11. DRAWINGS ARE DIAGRAMMATIC IN NATURE AND DO NOT SHOW EVERY EXACT DETAIL OF PIPING AND DUCTWORK. PROVIDE OFFSETS AS NECESSARY TO AVOID LOCAL OBSTRUCTIONS OR INTERFERENCES WITH OTHER TRADES. REVIEW ALL PIPING AND DUCT RUNS PRIOR TO FABRICATION AND IMMEDIATELY NOTIFY THE ARCHITECT/ENGINEER OF ANY INTERFERENCES AND/OR LACK OF ADEQUATE CLEARANCES.
12. SHOULD PROJECT CONDITIONS REQUIRE REARRANGEMENT OF WORK, MARK SUCH CHANGES ON THE AS-BUILT DRAWINGS. IF THESE CHANGES REQUIRE ALTERNATE METHODS TO THOSE APPROVED BY THE CONTRACT DOCUMENTS, SUBMIT SHOP DRAWINGS SHOWING THE PROPOSED ALTERNATE METHODS TO THE ARCHITECT/ENGINEER FOR REVIEW/APPROVAL PRIOR TO PROCEEDING WITH WORK.
13. COORDINATE ALL SWITCH, THERMOSTAT, FIRE EXTINGUISHER, ETC. LOCATIONS WITH THE STATE/ENGINEER PRIOR TO INSTALLATION TO AVOID INTERFERENCES WITH PAINTING, BULLETIN BOARDS, FURNITURE, ETC. ANY ITEM NOT PROPERLY COORDINATED SHALL BE RELOCATED AT NO ADDITIONAL COST TO THE STATE.
14. ALL STEEL SHALL BE HOT DIPPED GALVANIZED. GALVANIZED STEEL EXPOSED TO WEATHER SHALL HAVE WEATHER PROOF PAINT TO MATCH SURFACES. PROVIDE TWO EXTRA COATS OF EPOXY PAINT.
15. ALL ELECTRICAL AND CONTROL WIRING SHALL BE IN CONDUIT. PROVIDE GALVANIZED STEEL PIPE CONDUIT FOR EXPOSED TO WEATHER CONDUIT.
16. ALL DUCT DIMENSIONS SHOWN ARE NET DIMENSIONS.
17. PROVIDE DUCTWORK REDUCER FITTINGS AT AIR DEVICE CONNECTIONS AS REQUIRED.
18. PROVIDE OPPOSED BLADE VOLUME DAMPERS AND STAINLESS STEEL BIRDSCREENS FOR ALL OUTSIDE AIR DUCTS AND LOUVERS.
19. ALL SWITCHES, TIMECLOCKS, THERMOSTATS, AND CONTROL ITEMS SHALL BE ADA ACCESSIBLE AND SHALL BE MOUNTED AT 44" AFF AS PER ADA REQUIREMENTS OR ACCORDING TO THE STATE'S INSTRUCTIONS.
20. PROVIDE REBALANCING DURING ONE YEAR GUARANTEE PERIOD TO SATISFY USER'S REQUIREMENTS. CONTRACTOR SHALL PROVIDE TEST AND BALANCING REPORTS.
21. COORDINATE ALL WORK WITH OTHER TRADES TO AVOID INTERFERENCES AND DELAYS.
22. EXISTING PLUMBING/STORM DRAIN/CONDUITS SHALL BE REHUNG/REROUTED AS REQUIRED TO ACCOMMODATE NEW HVAC EQUIPMENT AND DUCTWORK. VERIFY ALL WASTE AND WATER INVERTS, LOCATIONS, SIZES, AND CONDITIONS OF PIPING.
23. ALL HVAC DUCTWORK SHALL HAVE EITHER TURNING VANES OR RADIUS ELBOWS AT EACH BEND OR ELBOW WHETHER SHOWN ON THE DRAWINGS OR NOT.
24. SEISMICALLY BRACE ALL EQUIPMENT, PIPING, AND DUCTWORK IN ACCORDANCE WITH THE CURRENT BUILDING CODE AND THEIR RESPECTIVE SEISMIC ZONE LOCATIONS.
25. TONE AND LOCATE ALL UTILITY LINES OR OTHER INTERFERENCES IN AREAS OF PROPOSED TRENCH WORK PRIOR TO START OF EXCAVATION. REPAIR OR PAY FOR ALL DAMAGES TO EXISTING UTILITIES. AT NO COST TO THE STATE.
26. PROVIDE DIELECTRIC UNIONS OR SEPARATIONS AT ALL DISSIMILAR METALS. PROVIDE UNIONS AFTER ALL SHUTOFF VALVES
27. PROVIDE ACCESS PANELS FOR ALL ITEMS UNDER THIS SECTION REQUIRING SERVICING, INSPECTION, MAINTENANCE, AND ADJUSTMENT.
28. PROVIDE ESCUTCHEON PLATES AT ALL EXPOSED WALL PENETRATIONS IN FINISHED AREAS, EXTERIOR WALL, ETC.
29. ALL PENETRATIONS THRU EXISTING WALLS, FOUNDATIONS, AND FLOOR SLABS SHALL BE IN TOTAL COMPLIANCE WITH ARCHITECTURAL/STRUCTURAL PROCEDURES AND DRAWINGS.
30. ALL PENETRATIONS THRU RATED WALLS AND CEILINGS SHALL BE EQUIPPED WITH APPROVED FIRE STOPPING AND OR FIRE & SMOKE DAMPERS.
31. DRAWING FILES WILL NOT BE AVAILABLE TO CONTRACTORS FOR SHOP DRAWINGS OR ANY OTHER PURPOSE.
32. PROVIDE ISOLATION VALVES ON PIPING BRANCH LINES AND VOLUME DAMPERS ON DUCTWORK BRANCH LINES WHETHER SHOWN ON THE DRAWINGS OR NOT.
33. CONTRACTOR SHALL SCHEDULE, TAG, AND LABEL ALL VALVES AND PIPING. ALL PIPING SHALL ALSO BE LABELED WITH DIRECTION OF FLOW.
34. ALL EXTERIOR NUTS, BOLTS, AND SCREWS, WASHERS, FASTENERS, SUPPORTS STRAPS, ETC. SHALL BE TYPE 316 STAINLESS STEEL.
35. VERIFY AND COORDINATE ALL ROOF, WALL, AND FLOOR PENETRATIONS WITH THE ARCHITECTURAL AND STRUCTURAL DRAWINGS PRIOR TO THE START OF CONSTRUCTION.
36. OBTAIN APPROVAL FROM OFFICER-IN-CHARGE BEFORE MAKING ANY PENETRATIONS THROUGH STRUCTURAL MEMBERS, WALLS, AND SLABS REQUIRED FOR MECHANICAL WORK THAT DOES NOT HAVE THE PRIOR OPENING.
37. PATCH AND PAINT ALL EXPOSED MATERIAL, INCLUDING DUCTWORK, TO MATCH ADJACENT SURFACES OR AS INDICATED.
38. DAMAGES FROM REMOVAL AND INSTALLATION OF ANY MECHANICAL ITEMS SHALL BE REPAIRED/PATCHED AND PAINTED TO MATCH EXISTING.
39. PARTIAL SUBMITTALS AND SHOP DRAWINGS ARE NOT ACCEPTABLE AND WILL BE RETURNED WITHOUT REVIEW.

FIXTURE UNIT COUNT

DEMO

FIXTURE	QTY	F.U. EACH	SUBTOTAL F.U.
WATER CLOSET (FT) (WC)	2	1.7	3.4
LAVATORY (ALAV)	2	0.6	1.2
HAND SINK (HS)	1	0.6	0.6
URINAL	1	1.7	1.7
HOSE BIBB	1	2.5	2.5
HOSE BIBB (ADD)	4	1.0	4.0
TOTAL			13.4 FU 15.0 GPM 900 GPD

NEW

FIXTURE	QTY	F.U. EACH	SUBTOTAL F.U.
WATER CLOSET (FT) (WC)	1	1.7	1.7
LAVATORY (LAV)	1	0.6	0.6
KITCHEN SINK (SK)	1	1.6	1.6
MOP SINK	1	2.0	2.0
HOSE BIBB	1	2.5	2.5
HOSE BIBB (ADD)	3	1.0	3.0
TOTAL			11.4 FU 14.0 GPM 840 GPD

MECHANICAL LEGEND

SYMBOL	ABBREV.	DESCRIPTION
GENERAL		
	AFF	ABOVE FINISHED FLOOR
	BFF	BELOW FINISHED FLOOR
	DN	DOWN
	EA	EACH
(E)		EXISTING
(N)		NEW
	NTS	NOT TO SCALE
	POC	POINT OF CONNECTION
(R)		REMOVE
	(TYP)	TYPICAL
HVAC		
	ACCU	AIR COOLED CONDENSING UNIT
— CD —	CD	CONDENSATE DRAIN
	CFM	CUBIC FEET PER MINUTE
	DT	DUCT
	EA	EXHAUST AIR
	EAR	EXHAUST AIR REGISTER
	EF	EXHAUST FAN
	FCU	FAN COIL UNIT
		FLEX DUCTWORK
	F.D.	FIRE DAMPER
	NK	NECK
	OA	OUTSIDE AIR
	OBVD	OPPOSED BLADE VOLUME DAMPER
	RAR	RETURN AIR REGISTER
	SAD	SUPPLY AIR DIFFUSER
	SAR	SUPPLY AIR REGISTER
T	T-STAT	THERMOSTAT
	TV	TURNING VANES
	U/D	UNDERCUT DOOR
PLUMBING		
	A-	ACCESSIBLE
	ASK	ACCESSIBLE SINK
	COTG	CLEAN OUT TO GRADE
	CW	COLD WATER
	FCO	FLOOR CLEANOUT
	FD	FLOOR DRAIN
	GPD	GALLONS PER DAY
	GPM	GALLONS PER MINUTE
	HB	HOSE BIBB
	HW	HOT WATER
	IEWH	INSTANTANEOUS ELECTRIC WATER HEATER
	LAV	LAVATORY
	MS	MOP SINK
	S	SANITARY/WASTE
	SK	SINK
	SOV	SHUT OFF VALVE
	UR	URINAL
	V	VENT
	VTR	VENT THRU ROOF
	WC	WATER CLOSET
	WCO	WALL CLEANOUT
FIRE PROTECTION		
	FE	FIRE EXTINGUISHER
	FS	CONCEALED FIRE SPRINKLER HEAD
		FIRE RATED PARTITION

HAWAI'I COUNTY ENERGY CODE

2018 IECC, HAWAI'I REVISED STATUTES HRS 107-24 TO 28 & HAWAI'I ADMINISTRATIVE RULES HAR 3-181.1

COMMERCIAL BUILDING ENERGY EFFICIENCY STANDARDS

I CERTIFY THAT, TO THE BEST OF MY KNOWLEDGE, THIS PROJECTS DESIGN SUBSTANTIALLY CONFORMS TO THE BUILDING ENERGY EFFICIENCY STANDARDS PERTAINING TO THE COMMERCIAL PROVISIONS FOR MECHANICAL SYSTEMS (C403, C404, AND C405) OF THE 2018 IECC WITH AMENDMENTS PER HAR 3-181.1:

STATE AMENDMENTS: EFFECTIVE FOR NEW APPLICANTS BEGINNING 09/01/2021
COUNTY AMENDMENTS: PENDING

COMPLIANCE METHOD

- ☒ 2018 IECC AS AMENDED. MANDATORY & PRESCRIPTIVE
- ☐ 2018 IECC AS AMENDED. MANDATORY & TOTAL BUILDING PERFORMANCE
- ☐ ASHRAE STANDARD 90.1-2016. MANDATORY & PRESCRIPTIVE
- ☐ ASHRAE STANDARD 90.1-2016. MANDATORY & ENERGY COST BUDGET

INFORMATION IN CONSTRUCTION DOCUMENTS

HVAC SYSTEMS	YES	N/A
EQUIPMENT CAPACITY AND EFFICIENCY. C403.3	☒	☐
THERMOSTATIC CONTROLS. C403.4	☒	☐
GUEST ROOM DOOR SWITCHES. C403.2.3	☐	☒
VENTILATION RATE. C403.7	☒	☐
DEMAND CONTROL VENTILATION CONTROLS. C403.7.1	☐	☒
ENCLOSED PARKING GARAGE VENTILATION CONTROLS. C403.7.2	☐	☒
ENERGY RECOVERY VENTILATION SYSTEM. C403.7.4	☐	☒
KITCHEN EXHAUST SYSTEMS. C403.7.5	☐	☒
DUCT AND PLENUM INSULATION THICKNESS/R-VALUE. C403.11.1	☒	☐
DUCT AND PLENUM SEALING REQUIREMENTS. C403.11.1	☒	☐
PIPE INSULATION THICKNESS/R-VALUE. C403.2.11.3	☒	☐
FAN MOTOR HORSEPOWER. C403.8.1	☐	☒
FAN EFFICIENCY. C403.8.3	☐	☒
FAN MOTOR EFFICIENCY. C405.7	☐	☒
PUMP MOTOR EFFICIENCY. C405.7	☐	☒
VARIABLE FLOW FAN CONTROL. C403.8.5	☐	☒
STATIC PRESSURE SENSOR LOCATION C403.6.9	☐	☒
STATIC PRESSURE RESET CONTROL. C403.6.8	☐	☒
CHILLED WATER VARIABLE FLOW CONTROL. C403.4.4	☐	☒
CHILLER ISOLATION. C403.4.5	☐	☒
COOLING TOWER FAN CONTROL. C403.9	☐	☒
TERMINAL UNIT MINIMUM AND MAXIMUM AIRFLOW. C403.6	☐	☒
COMMISSIONING REQUIREMENTS. C408.2	☒	☐
REFRIGERATION		
REFRIGERATION EQUIPMENT EFFICIENCY. C403.10	☐	☒
WALK-IN COOLERS AND FREEZERS. C403.10.1 C403.10.2, & C403.10.4	☐	☒
REFRIGERATED WAREHOUSES. C403.10.1 & C403.10.4	☐	☒
REFRIGERATED DISPLAY CASES. C403.10.3 & C403.10.4	☐	☒
SERVICE WATER HEATER		
HEAT RECOVERY FOR SERVICE WATER HEATING. C403.9.5	☐	☒
EQUIPMENT CAPACITY AND EFFICIENCY. C404.2	☐	☒
PIPE INSULATION. C404.4	☐	☒
HOT WATER PIPE LENGTH/VOLUME. C404.5	☐	☒
HOT WATER CIRCULATION CONTROLS. C404.6	☐	☒
HEATED POOL AND SPA COVERS. C404.9.3	☐	☒
COMMISSIONING REQUIREMENTS. C408.2	☐	☒

NOTES

SIGNATURE: ______ DATE: 11/07/2022

NAME: ROSS R. TANAKA

TITLE: VICE PRESIDENT

LICENSE NO.: 9301-M

PROJECT NAME: HAWAII DISTRICT LAND OFFICE

PROJECT TMK: (3) 2-2-032:011

ROSS R. TANAKA, LICENSED PROFESSIONAL ENGINEER, No. 9301-M, HAWAII, U.S.A.
EXP. 4-30-2024

REVISION NO.	SYM.	DESCRIPTION	SHT./OF	DATE	APPROVED

ROSS R. TANAKA, LICENSED PROFESSIONAL ENGINEER, No. 9301-M, HAWAII, U.S.A.

EXPIRATION DATE: 4/30/2024

SIGNATURE

THIS WORK WAS PREPARED BY ME OR UNDER MY SUPERVISION AND CONSTRUCTION OF THIS PROJECT WILL BE UNDER MY OBSERVATION. (OBSERVATION OF CONSTRUCTION AS DEFINED IN CHAPTER 16-115 OF THE HAWAII ADMINISTRATIVE RULES, DEPARTMENT OF COMMERCE AND CONSUMER AFFAIRS ENTITLED PROFESSIONAL ENGINEERS, ARCHITECTS, SURVEYORS AND LANDSCAPE ARCHITECTS).

STATE OF HAWAII
DEPARTMENT OF LAND AND NATURAL RESOURCES
ENGINEERING DIVISION

HAWAII DISTRICT LAND OFFICE
HILO, HAWAI`I

GENERAL NOTES

DESIGNED: MEI	SUBMITTED:
DRAWN: MEI	DATE: NOVEMBER 2022
CHECKED: RRT	SCALE: AS NOTED
APPROVED: RRT	DRAWING NO.
CHIEF ENGINEER	M-001

Carty Chang
E-signed 2022-11-28 04:17PM HST
carty.s.chang@hawaii.gov
State of Hawaii
Chief Engineer

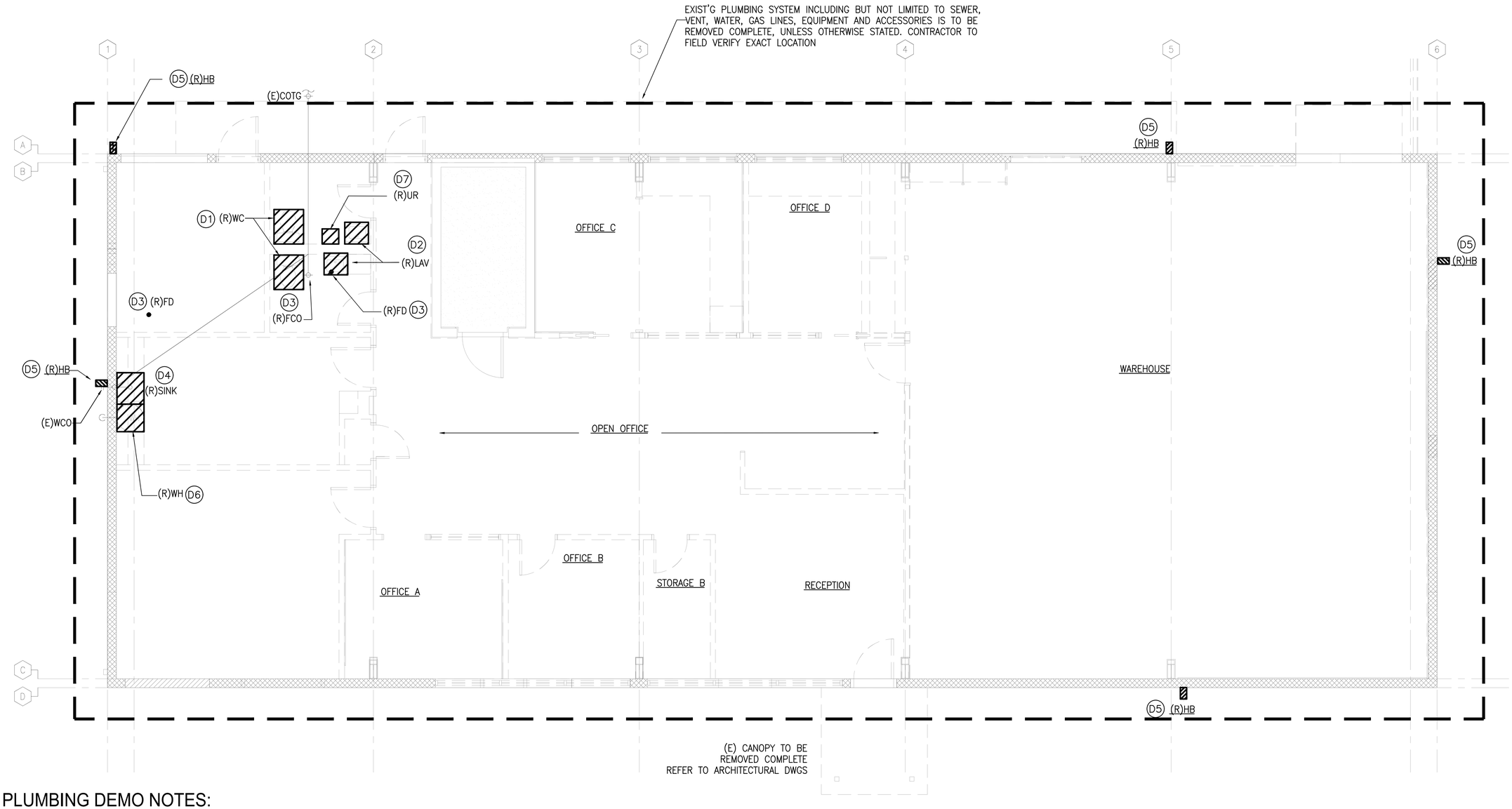

PLUMBING DEMO NOTES:

D1 EXISTING WATER CLOSET TO BE REMOVED COMPLETELY. EXISTING PLUMBING LINES (WATER, VENT, WASTE) TO BE CUT AND CAPPED AS REQUIRED TO ACCOMMODATE NEW ARCHITECTURAL LAYOUT. CONTRACTOR TO FIELD VERIFY.

D2 EXISTING LAVATORY TO BE REMOVED COMPLETELY. EXISTING PLUMBING LINES (WATER, VENT, WASTE) TO BE CUT AND CAPPED AS REQUIRED TO ACCOMMODATE NEW ARCHITECTURAL LAYOUT. CONTRACTOR TO FIELD VERIFY.

D3 EXISTING FLOOR DRAIN, FLOOR CLEAN OUT TO BE REMOVED COMPLETELY. EXISTING PLUMBING LINES TO BE CUT AND CAPPED AS REQUIRED TO ACCOMMODATE NEW ARCHITECTURAL LAYOUT. CONTRACTOR TO FIELD VERIFY.

D4 EXISTING SINK TO BE REMOVED COMPLETELY. EXISTING PLUMBING LINES TO BE CUT AND CAPPED AS REQUIRED TO ACCOMMODATE NEW ARCHITECTURAL LAYOUT. CONTRACTOR TO FIELD VERIFY.

D5 EXISTING HOSE BIBB WITH ASSOCIATED WATER LINE TO BE REMOVED COMPLETELY TO ACCOMMODATE NEW ARCHITECTURAL LAYOUT. CONTRACTOR TO FIELD VERIFY.

D6 EXISTING WATER HEATER TO BE REMOVED COMPLETELY. EXISTING PLUMBING LINES TO BE CUT AND CAPPED. CONTRACTOR TO FIELD VERIFY.

D7 EXISTING URINAL TO BE REMOVED COMPLETELY. EXISTING PLUMBING LINES TO BE CUT AND CAPPED AS REQUIRED TO ACCOMMODATE NEW ARCHITECTURAL LAYOUT. CONTRACTOR TO FIELD VERIFY.

1 / M-101 **PLUMBING DEMOLITION PLAN**
SCALE: 1/4" = 1'-0"

0 2' 4' 8'
SCALE: 1/4" = 1'-0"

WEST SOUTH NORTH EAST

REVISION NO.	SYM.	DESCRIPTION	SHT./OF	DATE	APPROVED

ROSS R. TANAKA
LICENSED PROFESSIONAL ENGINEER
No. 9301-M
HAWAII, U.S.A.

EXPIRATION DATE: 4/30/2024
SIGNATURE

THIS WORK WAS PREPARED BY ME, OR UNDER MY SUPERVISION AND CONSTRUCTION OF THIS PROJECT WILL BE UNDER MY OBSERVATION. (OBSERVATION OF CONSTRUCTION IS NOT REQUIRED UNDER CHAPTER 16 OF THE HAWAII ADMINISTRATIVE RULES, DEPARTMENT OF COMMERCE AND CONSUMER AFFAIRS ENTITLED PROFESSIONAL ENGINEERS, ARCHITECTS, SURVEYORS AND LANDSCAPE ARCHITECTS).

STATE OF HAWAII
DEPARTMENT OF LAND AND NATURAL RESOURCES
ENGINEERING DIVISION

HAWAII DISTRICT LAND OFFICE
HILO, HAWAI'I

PLUMBING DEMOLITION PLAN

DESIGNED: MEI	SUBMITTED:
DRAWN: MEI	DATE: NOVEMBER 2022
CHECKED: RRT	SCALE: AS NOTED
APPROVED: RRT	DRAWING NO. M-101
CHIEF ENGINEER	

Carty Chang
E-signed 2022-11-28 04:17PM HST
carty.s.chang@hawaii.gov
State of Hawaii
Chief Engineer

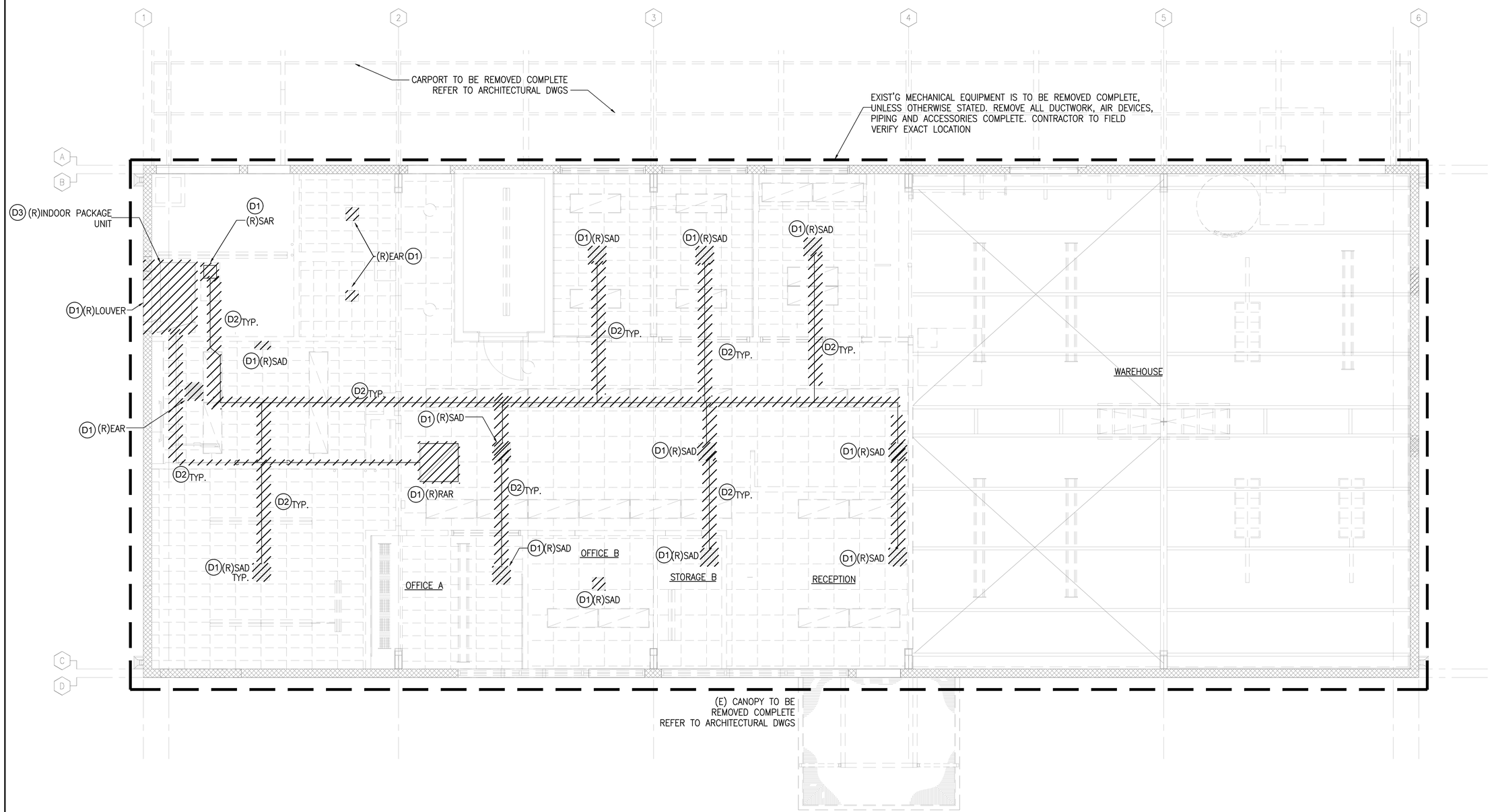

MECHANICAL DEMOLITION NOTES:

D1 EXIST'G AIR DEVICE TO BE REMOVED COMPLETE. REMOVE ALL DUCTWORK, PIPING AND ACCESSORIES COMPLETE. CONTRACTOR TO FIELD VERIFY EXACT LOCATION.

D2 EXIST'G DUCTWORK TO BE REMOVED COMPLETE. REMOVE ALL PIPING AND ACCESSORIES COMPLETE. CONTRACTOR TO FIELD VERIFY EXACT LOCATION.

D3 EXIST'G MECHANICAL EQUIPMENT IS TO BE REMOVED COMPLETE, UNLESS OTHERWISE STATED. REMOVE ALL DUCTWORK, AIR DEVICES, PIPING AND ACCESSORIES COMPLETE. CONTRACTOR TO FIELD VERIFY EXACT LOCATION.

1 / M-102 **MECHANICAL DEMOLITION PLAN**
SCALE: 1/4" = 1'-0"

0 2' 4' 8'
SCALE: 1/4" = 1'-0"

WEST SOUTH NORTH EAST

REVISION NO.	SYM.	DESCRIPTION	SHT./OF	DATE	APPROVED

ROSS R. TANAKA
LICENSED PROFESSIONAL ENGINEER
No. 9301-M
HAWAII, U.S.A.

EXPIRATION DATE: 4/30/2024
SIGNATURE

THIS WORK WAS PREPARED BY ME OR UNDER MY SUPERVISION AND CONSTRUCTION OF THIS PROJECT WILL BE UNDER MY OBSERVATION. (OBSERVATION OF CONSTRUCTION AS DEFINED IN CHAPTER 16-115 OF THE HAWAII ADMINISTRATIVE RULES, DEPARTMENT OF COMMERCE AND CONSUMER AFFAIRS, ENTITLED "PROFESSIONAL ENGINEERS, ARCHITECTS, SURVEYORS AND LANDSCAPE ARCHITECTS).

STATE OF HAWAII
DEPARTMENT OF LAND AND NATURAL RESOURCES
ENGINEERING DIVISION

HAWAII DISTRICT LAND OFFICE
HILO, HAWAI'I

MECHANICAL DEMOLITION PLAN

DESIGNED: MEI	SUBMITTED:
DRAWN: MEI	DATE: NOVEMBER 2022
CHECKED: RRT	SCALE: AS NOTED
APPROVED: RRT	DRAWING NO. M-102
CHIEF ENGINEER	

Carty Chang
E-signed 2022-11-28 04:17PM HST
carty.s.chang@hawaii.gov
State of Hawaii
Chief Engineer

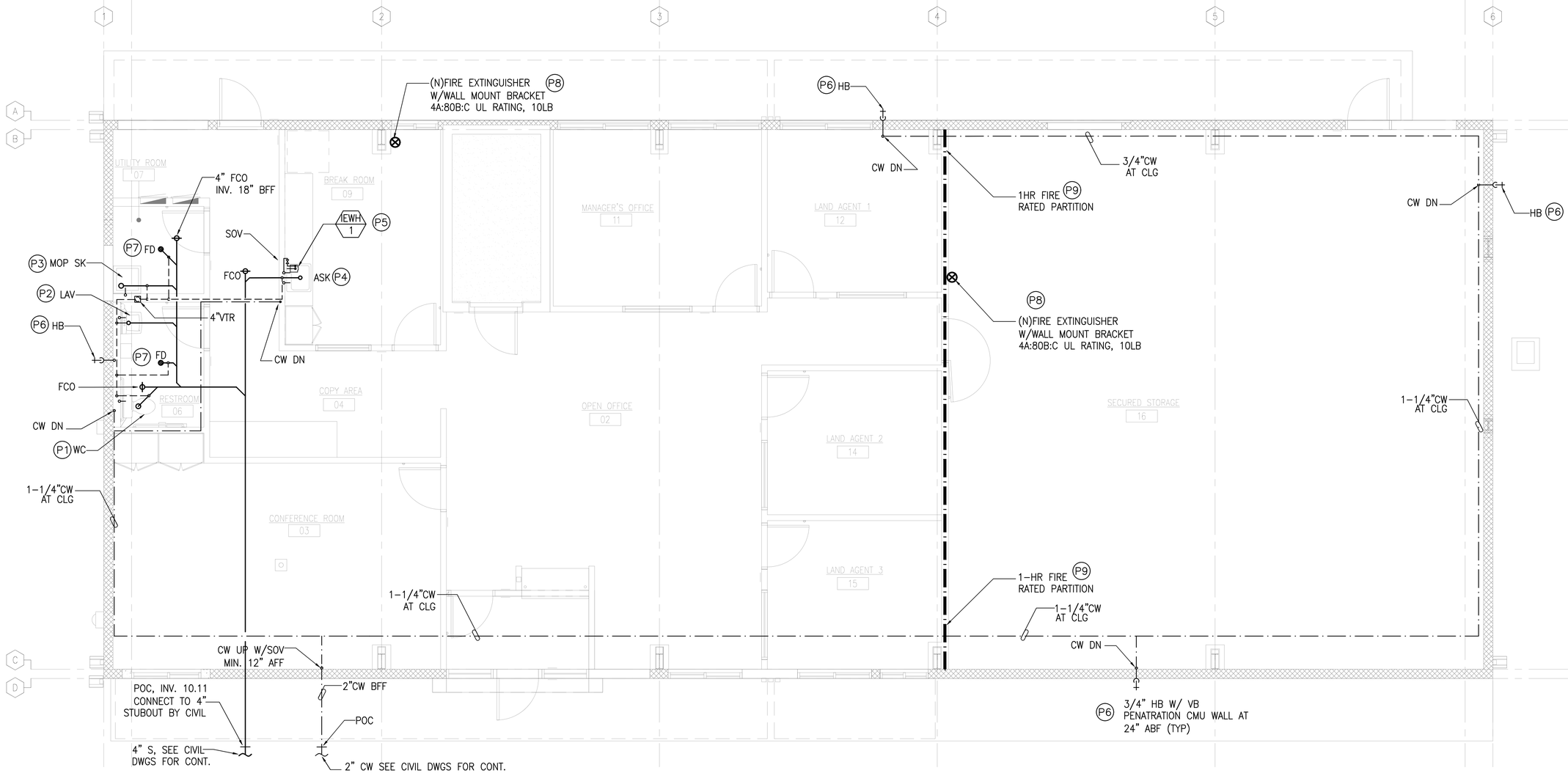

NEW PLUMBING WORK NOTES:

P1 PROVIDE AND INSTALL NEW WATER CLOSET COMPLETE. PROVIDE AND INSTALL NEW CW, VENT, AND SANITARY PIPING AS REQUIRED. PATCH/REPAIR TO MATCH EXIST'G. CONTRACTOR TO FIELD VERIFY.

P2 PROVIDE AND INSTALL NEW LAVATORY COMPLETE. PROVIDE AND INSTALL NEW CW, VENT, AND SANITARY PIPING AS REQUIRED. PROVIDE P-TRAP, SUPPLY STOPS, SUPPLY PIPING, FLOOR MOUNT CARRIER, AND ACCESSORIES AS REQUIRED FOR NEW INSTALLATION. PATCH/REPAIR TO MATCH EXIST'G. CONTRACTOR TO FIELD VERIFY.

P3 PROVIDE AND INSTALL NEW MOP SINK COMPLETE. PROVIDE AND INSTALL NEW CW, VENT, AND SANITARY PIPING AS REQUIRED. PATCH/REPAIR TO MATCH EXIST'G. CONTRACTOR TO FIELD VERIFY.

P4 PROVIDE AND INSTALL NEW ACCESSIBLE SINK COMPLETE. PROVIDE AND INSTALL NEW CW, VENT, AND SANITARY PIPING AS REQUIRED. PATCH/REPAIR TO MATCH EXIST'G. CONTRACTOR TO FIELD VERIFY.

P5 PROVIDE AND INSTALL NEW UNDERSINK ELECTRIC TANKLESS WATER HEATER. PROVIDE NEW WATER PIPING AS REQUIRED TO CONNECT TO NEW WATER HEATER.

P6 PROVIDE AND INSTALL NEW HOSE BIBB W/ NON-REMOVABLE VACUUM BREAKER. PROVIDE NEW WATER PIPING AS REQUIRED. PATCH/REPAIR TO MATCH EXIST'G. CONTRACTOR TO FIELD VERIFY.

P7 PROVIDE AND INSTALL NEW FLOOR DRAIN WITH TRAP PRIMER COMPLETE. PROVIDE AND INSTALL NEW CW, VENT, AND SANITARY PIPING AS REQUIRED. PATCH/REPAIR TO MATCH EXIST'G. CONTRACTOR TO FIELD VERIFY.

P8 PROVIDE AND INSTALL NEW FIRE EXTINGUISHER WITH WALL MOUNTED SUPPORT. FIRE EXTINGUISHER SHALL BE MOUNTED AT 44" FROM TOP OF THE UNIT TO FINISHED FLOOR AS REQUIRED. PATCH/REPAIR TO MATCH EXIST'G. CONTRACTOR TO FIELD VERIFY.

P9 PROVIDE FIRESTOPPING AT ALL PENETRATIONS THROUGH FIRE RATED PARTITIONS. PATCH/REPAIR TO MATCH EXIST'G. CONTRACTOR TO FIELD VERIFY.

1 / M-201 **NEW PLUMBING PLAN**
SCALE: 1/4" = 1'-0"

0 2' 4' 8'
SCALE: 1/4" = 1'-0"

WEST SOUTH NORTH EAST

REVISION NO.	SYM.	DESCRIPTION	SHT./OF	DATE	APPROVED

ROSS R. TANAKA LICENSED PROFESSIONAL ENGINEER No. 9301-M HAWAII, U.S.A.

EXPIRATION DATE: 4/30/2024
SIGNATURE

THIS WORK WAS PREPARED BY ME OR UNDER MY SUPERVISION AND CONSTRUCTION OF THIS PROJECT WILL BE UNDER MY OBSERVATION. (OBSERVATION OF CONSTRUCTION AS DEFINED IN CHAPTER 16-115 OF THE HAWAII ADMINISTRATIVE RULES, DEPARTMENT OF COMMERCE AND CONSUMER AFFAIRS, ENTITLED PROFESSIONAL ENGINEERS, ARCHITECTS, SURVEYORS AND LANDSCAPE ARCHITECTS).

STATE OF HAWAII
DEPARTMENT OF LAND AND NATURAL RESOURCES
ENGINEERING DIVISION

HAWAII DISTRICT LAND OFFICE
HILO, HAWAI'I

PLUMBING NEW WORK PLAN

DESIGNED: MEI | SUBMITTED:
DRAWN: MEI | DATE: NOVEMBER 2022
CHECKED: RRT | SCALE: AS NOTED
APPROVED: RRT | DRAWING NO. M-201
CHIEF ENGINEER

Carty Chang
E-signed 2022-11-28 04:17PM HST
carty.s.chang@hawaii.gov
State of Hawaii
Chief Engineer

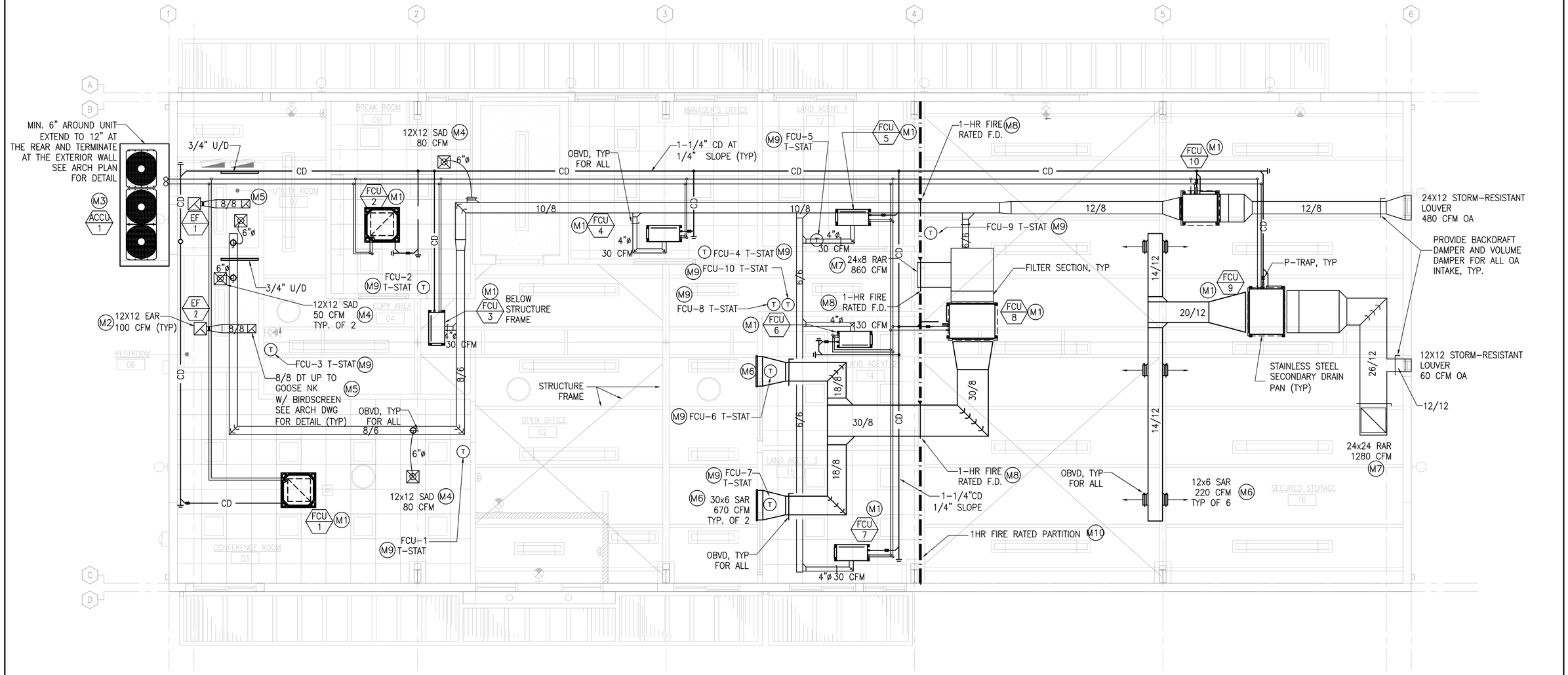

NEW MECHANICAL WORK NOTES:

(M1) INSTALL NEW FAN COIL UNITS COMPLETE, INCLUDING SUPPLY DUCTWORK, RETURN DUCTWORK, INSULATED REFRIGERANT, CONDENSATE PIPING, AND ASSOCIATED SUPPORTS. PROVIDE STAINLESS STEEL SECONDARY DRAIN PAN WITH DRAIN CONNECTION AT LOCATION SHOWN. PATCH AND REPAIR ANY DAMAGES TO MATCH EXISTING. CONTRACTOR TO FIELD VERIFY.

(M2) PROVIDE NEW EXHAUST FAN COMPLETE INCLUDING CONTROLS, ASSOCIATED DUCTWORK AND ACCESSORIES. RESTROOM DOOR SHALL HAVE 3/4" MINIMUM UNDERCUT FOR MAKE-UP AIR. PATCH/REPAIR ANY DAMAGES TO MATCH EXISTING, CONTRACTOR TO FIELD VERIFY.

(M3) PROVIDE NEW AIR COOLED CONDENSING UNIT WITH 6" THICK CONCRETE PAD. MIN. 6" SPACING AROUND. CONTRACTOR TO FIELD VERIFY AND COORDINATE FINAL LOCATION. PATCH/REPAIR ANY DAMAGES TO MATCH EXISTING.

(M4) PROVIDE SUPPLY AIR DIFFUSER AT LOCATION SHOWN. PROVIDE WITH FLEX DUCT AND OBVD. PATCH/REPAIR ANY DAMAGES TO MATCH EXISTING, CONTRACTOR TO FIELD VERIFY.

(M5) PROVIDE 8X8 EA DUCTWORK, JACK UP THROUGH ROOF TO GOOSENECK. PATCH/REPAIR ANY DAMAGES TO MATCH EXISTING, CONTRACTOR TO FIELD VERIFY.

(M6) PROVIDE SUPPLY AIR REGISTER WITH OBVD AT LOCATION SHOWN. PATCH/REPAIR ANY DAMAGES TO MATCH EXISTING, CONTRACTOR TO FIELD VERIFY.

(M7) PROVIDE RETURN AIR REGISTER WITH OBVD AT LOCATION SHOWN. PATCH/REPAIR ANY DAMAGES TO MATCH EXISTING, CONTRACTOR TO FIELD VERIFY.

(M8) PROVIDE NEW ACCESS 1 HOUR FIRE RATED FIRE DAMPERS AT DUCTS PENETRATING. CONTRACTOR FOR FIELD VERIFY AND COORDINATE FINAL LOCATION. PATCH/REPAIR ANY DAMAGES TO MATCH EXISTING.

(M9) PROVIDE NEW THERMOSTAT AND CONTROL WIRING AS REQUIRED TO CONNECT TO NEW FCU. MOUNT NEW THERMOSTAT AT 48" AFF. PATCH/REPAIR ANY DAMAGES TO MATCH EXISTING. CONTRACTOR TO FIELD VERIFY.

(M10) PROVIDE FIRESTOPPING AT ALL PENETRATIONS THROUGH FIRE RATED PARTITIONS. PATCH/REPAIR ANY DAMAGES TO MATCH EXISTING. CONTRACTOR TO FIELD VERIFY.

1 / M-202 **NEW MECHANICAL PLAN**
SCALE: 1/4" = 1'-0"

0 2' 4' 8'
SCALE: 1/4" = 1'-0"

WEST SOUTH NORTH EAST

REVISION NO.	SYM.	DESCRIPTION	SHT./OF	DATE	APPROVED

ROSS R. TANAKA
LICENSED PROFESSIONAL ENGINEER
No. 9301-M
HAWAII, U.S.A.

EXPIRATION DATE: 4/30/2024
SIGNATURE

THIS WORK WAS PREPARED BY ME, OR UNDER MY SUPERVISION AND CONSTRUCTION OF THIS PROJECT WILL BE UNDER MY OBSERVATION. (OBSERVATION OF CONSTRUCTION AS DEFINED IN CHAPTER 16-115 OF THE STATE OF HAWAII BOARD OF PROFESSIONAL ENGINEERS, ARCHITECTS, AND CONSULTANTS ADMINISTRATIVE RULES, DOMESTIC AND CONSUMER AFFAIRS (ENTITLED PROFESSIONAL ENGINEERS, ARCHITECTS, SURVEYORS AND LANDSCAPE ARCHITECTS).

STATE OF HAWAII
DEPARTMENT OF LAND AND NATURAL RESOURCES
ENGINEERING DIVISION

HAWAII DISTRICT LAND OFFICE
HILO, HAWAI'I

NEW MECHANICAL PLAN

DESIGNED: MEI	SUBMITTED:
DRAWN: MEI	DATE: NOVEMBER 2022
CHECKED: RRT	SCALE: AS NOTED
APPROVED: RRT	DRAWING NO. M-202
CHIEF ENGINEER	

Carty Chang
E-signed 2022-11-28 04:17PM HST
carty.s.chang@hawaii.gov
State of Hawaii
Chief Engineer

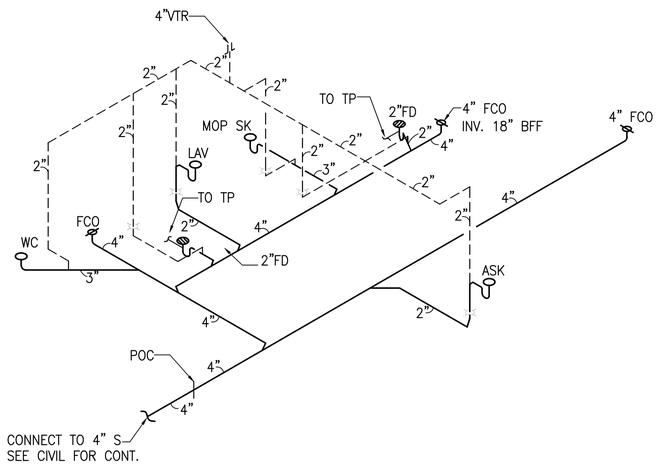

1 M-301 **SANITARY DIAGRAM**
NTS

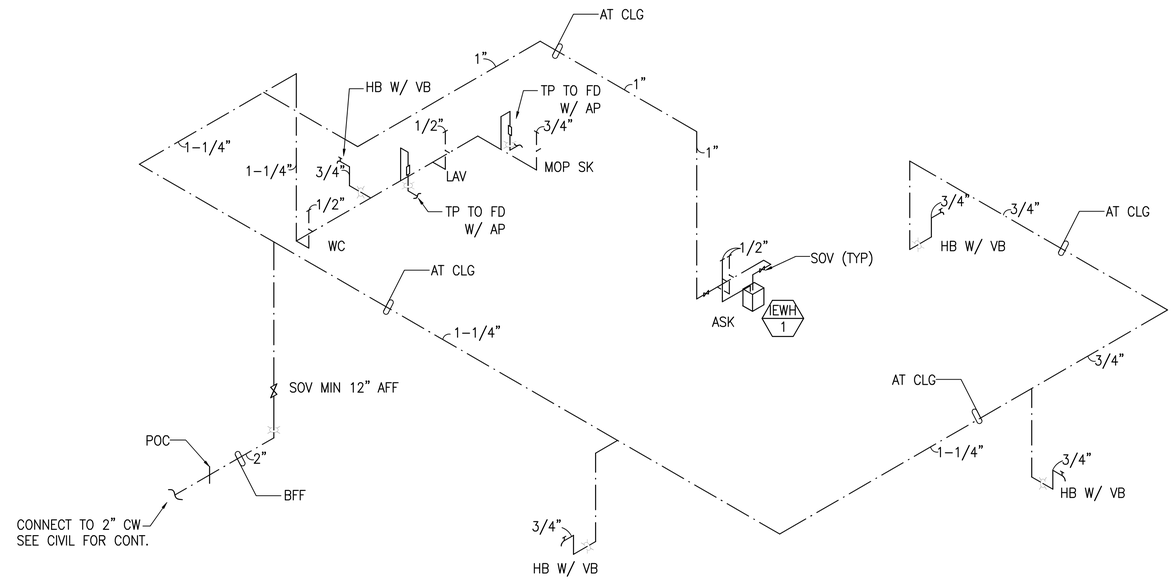

2 M-301 **WATER DIAGRAM**
NTS

REVISION NO.	SYM.	DESCRIPTION	SHT./OF	DATE	APPROVED

ROSS R. TANAKA
LICENSED PROFESSIONAL ENGINEER
No. 9301-M
HAWAII, U.S.A.

EXPIRATION DATE: 4/30/2024

SIGNATURE

THIS WORK WAS PREPARED BY ME, OR UNDER MY SUPERVISION AND CONSTRUCTION OF THIS PROJECT WILL BE UNDER MY OBSERVATION. (OBSERVATION OF CONSTRUCTION AS DEFINED IN CHAPTER 16-115 OF THE HAWAII ADMINISTRATIVE RULES, DEPARTMENT OF COMMERCE AND CONSUMER AFFAIRS, ENTITLED PROFESSIONAL ENGINEERS, ARCHITECTS, SURVEYORS AND LANDSCAPE ARCHITECTS).

STATE OF HAWAII
DEPARTMENT OF LAND AND NATURAL RESOURCES
ENGINEERING DIVISION

HAWAII DISTRICT LAND OFFICE
HILO, HAWAI'I

SANITARY AND WATER DIAGRAMS

DESIGNED: MEI	SUBMITTED:
DRAWN: MEI	DATE: NOVEMBER 2022
CHECKED: RRT	SCALE: AS NOTED
APPROVED: RRT	DRAWING NO. M-301
CHIEF ENGINEER	

Carty Chang
E-signed 2022-11-28 04:17PM HST
carty.s.chang@hawaii.gov
State of Hawaii
Chief Engineer

MECHANICAL EQUIPMENT SCHEDULE

PROVIDE INTEGRAL MAGNETIC STARTER/DISCONNECTS WITH AUTOMATIC RESET FOR ALL UNITS. PROVIDE NEMA-4X STARTER ENCLOSURE FOR ALL OUTDOOR EQUIPMENT. ALL OUTDOOR EQUIPMENT SHALL HAVE POLYSILOXANE COATING PROTECTION ON INSIDE AND OUTSIDE OF HOUSING. COILS(CONDENSER) SHALL HAVE BLYGOLD POLUAL COATING. PROVIDE HORIZONTALLY AND VERTICALLY RESTRAINED SPRING ISOLATORS WITH NEOPRENE DIPPED SPRINGS AND GALV. HOUSINGS ON ALL EQUIPMENT. PROVIDE 1/2" RUBBER PAD FOR ACCU, AND SPRING ISOLATORS FOR FCU. PROVIDE PLASTIC COATED CABLE SWAY BRACING ALL SUSPENDED EQUIPMENT. PROVIDE FLEXIBLE DUCT CONNECTIONS AT ALL EQUIPMENT. PROVIDE S.S. BIRDSCREEN AT ALL NEW & EXISTING OA INTAKES. PROVIDE PHASE FAILURE/PHASE REVERSAL/OVER VOLTAGE/UNDER VOLTAGE ELECTRICAL PROTECTION. PROVIDE CONTROL VOLTAGE TRANSFORMERS. PROVIDE SILICONE PROTECTION TO ALL CIRCUIT BOARDS TO PREVENT SHORT CIRCUITING CAUSED BY GECKO ETC.

VRF SPLIT-SYSTEM AIR CONDITIONING UNIT SCHEDULE

INDOOR UNITS

UNIT NO.	MANUFACTURER AND MODEL	LOCATION	TYPE	SUPPLY AIR, CFM	OUTSIDE AIR, CFM	ESP (IN WG)	TOTAL CAPACITY (BTUH)	ENT AIR TEMP db (°F)	ENT AIR TEMP wb (°F)	ELECTRICAL V	ELECTRICAL ø	ELECTRICAL Hz	ELECTRICAL MCA	REFRIG LINES* LIQ	REFRIG LINES* GAS	COND DRAIN	MAX SOUND LEVEL (dBA)	OPR WT (LBS)	REMARKS
FCU 1	MITSUBISHI PLFY-P24NEMU-E OR APPROVED EQUAL	CONF ROOM	4-WAY CASSETTE	770	80	–	24,000	80	67	208	1	60	0.51	3/8"	5/8"	1-1/4"	37	46	PROVIDE NEOPRENE ISOLATORS, STARTER AND DISCONNECT, FACTORY APPLIED CORROSION INHIBITOR COATING ON CONDENSER COIL, PROGRAMMABLE THERMOSTAT, CASING, AND FACTORY CONDENSATE PUMP. PROVIDE FILTER BOX WITH MERV 13 MINIMUM FILTER.
FCU 2	MITSUBISHI PLFY-P24NEMU-E OR APPROVED EQUAL	BREAK ROOM	4-WAY CASSETTE	560	70	–	12,000	80	67	208	1	60	0.33	1/4"	1/2"	1-1/4"	31	42	
FCU 3	MITSUBISHI PMFY-P08NBMU-E OR APPROVED EQUAL	COPY AREA	1-WAY CASSETTE	320	30	–	8,000	80	67	208	1	60	0.25	1/4"	1/2"	1-1/4"	37	31	
FCU 4	MITSUBISHI PMFY-P12NBMU-E OR APPROVED EQUAL	MANAGER	1-WAY CASSETTE	320	30	–	12,000	80	67	208	1	60	0.26	1/4"	1/2"	1-1/4"	37	31	
FCU 5	MITSUBISHI PMFY-P08NBMU-E OR APPROVED EQUAL	LAND AGENT 1	1-WAY CASSETTE	320	30	–	8,000	80	67	208	1	60	0.25	1/4"	1/2"	1-1/4"	37	31	
FCU 6	MITSUBISHI PMFY-P08NBMU-E OR APPROVED EQUAL	LAND AGENT 2	1-WAY CASSETTE	320	30	–	8,000	80	67	208	1	60	0.25	1/4"	1/2"	1-1/4"	37	31	
FCU 7	MITSUBISHI PMFY-P08NBMU-E OR APPROVED EQUAL	LAND AGENT 3	1-WAY CASSETTE	320	30	–	8,000	80	67	208	1	60	0.25	1/4"	1/2"	1-1/4"	37	31	
FCU 8	MITSUBISHI PEFY-P36NMHU-E OR APPROVED EQUAL	SECURED STORAGE	HIGH STATIC DUCTED	1340	70	1	36,000	80	67	208	1	60	4.23	3/8"	5/8"	1-1/4"	41	155	
FCU 9	MITSUBISHI PEFY-P36NMHU-E OR APPROVED EQUAL	SECURED STORAGE	HIGH STATIC DUCTED	1340	60	1	36,000	80	67	208	1	60	4.23	3/8"	5/8"	1-1/4"	41	155	
FCU 10	MITSUBISHI PEFY-P24NMHU-E OR APPROVED EQUAL	SECURED STORAGE	HIGH STATIC DUCTED	480	480	1	24,000	80	67	208	1	60	1.57	3/8"	5/8"	1-1/4"	36	100	

*CONTRACTOR SHALL CONFIRM REFRIGERANT PIPE SIZES WITH MANUFACTURER PRIOR TO PROCUREMENT.

OUTDOOR UNIT

UNIT NO.	MANUFACTURER AND MODEL	LOCATION	TYPE	REFRIG	NOMINAL CAPACITY (TONS)	TOTAL CAPACITY (BTUH)	AMBIENT AIR TEMP (°F)	MIN EER	ELECTRICAL V	ELECTRICAL ø	ELECTRICAL Hz	ELECTRICAL MCA	ELECTRICAL MOCP	OPR WT (LBS)	REMARKS
ACCU 1	MITSUBISHI PUHY-P192TNU-A(-BS) OR APPROVED EQUAL	GROUND	VARIABLE REFRIG FLOW	R-410a	16	192,000	95	–	208	3	60	33	50	1106	CONSISTS OF TWO PUHY-P96TNU-A (-BS) AND CMY-Y100CBK3 TWINNING KIT. PROVIDE 6" CONCRETE PAD, NEOPRENE ISOLATORS, STARTER AND DISCONNECT,
									208	3	60	33	50		

FAN SCHEDULE

UNIT	AREA SERVED	TYPE	CFM	ESP (INCH WG)	FAN RPM	ELECTRICAL W	ELECTRICAL V	ELECTRICAL PH	ELECTRICAL HZ	MAX SONE	MAKE & MODEL OR APPROVED EQUAL	REMARKS
EF 1	UTILITY ROOM	CEILING EXHAUST	100	0.4	935	80	115	1	60	2.0	GREENHECK SP-110-VG OR APPROVED EQUAL	INTERLOCK WITH LIGHT SWITCH. PROVIDE UNIT MOUNTED SPEED CONTROLLER. PROVIDE BACKDRAFT DAMPERS AND OBVD'S. PROVIDE WITH ISOLATOR KIT
EF 2	RESTROOM	CEILING EXHAUST	100	0.4	935	80	115	1	60	2.0	GREENHECK SP-110-VG OR APPROVED EQUAL	INTERLOCK WITH LIGHT SWITCH. PROVIDE UNIT MOUNTED SPEED CONTROLLER. PROVIDE BACKDRAFT DAMPERS AND OBVD'S. PROVIDE WITH ISOLATOR KIT

WATER HEATER SCHEDULE

UNIT	MANUFACTURER AND MODEL	LOCATION	SERVICE	ACTIVATION GPM	TEMP. RISE @ 1.0 GPM FLOW	ELECTRICAL WATTS	ELECTRICAL VOLTS	ELECTRICAL AMPS	ELECTRICAL ø	ELECTRICAL Hz	OPR WT POUNDS	REMARKS
EWH 1	CHRONOMITE E-60L/208	BREAK ROOM	DOMESTIC	0.35	41°F	6000	208	29	1	60	8	TANKLESS TYPE WATER HEATER, INSTALL UNDER COUNTER

REVISION NO.	SYM.	DESCRIPTION	SHT./OF	DATE	APPROVED

ROSS R. TANAKA
LICENSED PROFESSIONAL ENGINEER
No. 9301-M
HAWAII, U.S.A.

EXPIRATION DATE: 4/30/2024

SIGNATURE

THIS WORK WAS PREPARED BY ME, OR UNDER MY SUPERVISION, FOR CONSTRUCTION ON THE PROJECT SHOWN HEREON IN ANY CONSTRUCTION OTHERWISE OF CONSTRUCTION AS DEFINED IN CHAPTER 16-115 OF THE HAWAII ADMINISTRATIVE RULES, DEPARTMENT OF COMMERCE AND CONSUMER AFFAIRS ENTITLED PROFESSIONAL ENGINEERS, ARCHITECTS, SURVEYORS AND LANDSCAPE ARCHITECTS).

STATE OF HAWAII
DEPARTMENT OF LAND AND NATURAL RESOURCES
ENGINEERING DIVISION

HAWAII DISTRICT LAND OFFICE
HILO, HAWAI'I

MECHANICAL EQUIPMENT SCHEDULE

DESIGNED: MEI | SUBMITTED:
DRAWN: MEI | DATE: NOVEMBER 2022
CHECKED: RRT | SCALE: AS NOTED
APPROVED: RRT
CHIEF ENGINEER

Carty Chang
E-signed 2022-11-28 04:17PM HST
carty.s.chang@hawaii.gov
State of Hawaii
Chief Engineer

DRAWING NO. M-401

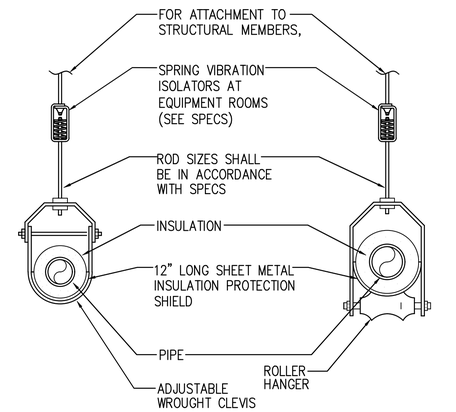

NOTE: 18" LONG RIGID INSULATION SHALL BE USED AT HANGERS

1 / M-501 PIPE HANGER DETAIL

NTS

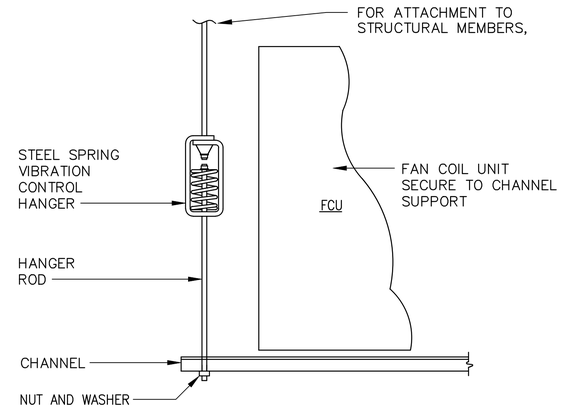

NOTE:
CHANNEL SUPPORTING UNIT SHALL CLEAR EXISTING ACCESS COVER SCREWS ON UNIT.

2 / M-501 TYPICAL FAN COIL UNIT MOUNTING DETAIL

NTS

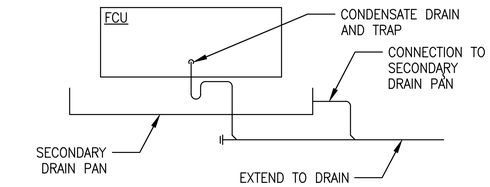

CONDENSATE DRAINAGE

THE TENANT'S CONTRACTOR SHALL PROVIDE CONDENSATE TRAP AND CONDENSATE DRAIN PIPING. PIPING SHALL BE EXTENDED FOR DISCHARGE INTO AN INDIRECT WASTE CONNECTION FROM THE SECONDARY DRAIN PAN SHALL BE PROVIDED. IN THE EVENT THE CONDENSATE CAN NOT BE DRAINED BY GRAVITY PROVIDE A CONDENSATE PUMPING SYSTEM COMPLETE WITH PUMP FAILURE / HIGH WATER ALARM.

3 / M-501 CONDENSATE DRAIN CONNECTION DETAIL

NTS

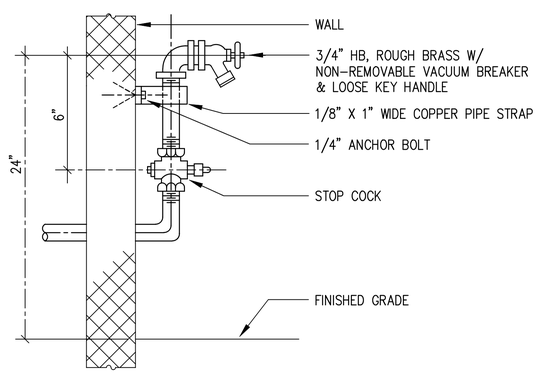

4 / M-501 HOSE BIBB MOUNTING DETAIL

NTS

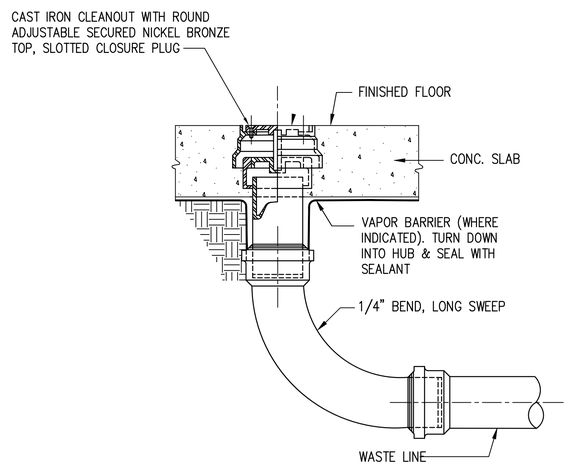

5 / M-501 FLOOR CLEAN OUT DETAIL

NTS

REVISION NO.	SYM.	DESCRIPTION	SHT./OF	DATE	APPROVED

ROSS R. TANAKA
LICENSED PROFESSIONAL ENGINEER
No. 9301-M
HAWAII, U.S.A.

EXPIRATION DATE: 4/30/2024

SIGNATURE

THIS WORK WAS PREPARED BY ME OR UNDER MY SUPERVISION AND CONSTRUCTION OF THIS PROJECT WILL BE UNDER MY OBSERVATION. OBSERVATION OF CONSTRUCTION IS NOT REQUIRED BY SECTION 16-115-3 OF THE HAWAII ADMINISTRATIVE RULES, DEPARTMENT OF COMMERCE AND CONSUMER AFFAIRS ENTITLED PROFESSIONAL ENGINEERS, ARCHITECTS, SURVEYORS AND LANDSCAPE ARCHITECTS).

STATE OF HAWAII
DEPARTMENT OF LAND AND NATURAL RESOURCES
ENGINEERING DIVISION

HAWAII DISTRICT LAND OFFICE
HILO, HAWAI'I

MECHANICAL DETAILS

DESIGNED: MEI	SUBMITTED:
DRAWN: MEI	DATE: NOVEMBER 2022
CHECKED: RRT	SCALE: AS NOTED
APPROVED: RRT	DRAWING NO. M-501
CHIEF ENGINEER	

Carty Chang
E-signed 2022-11-28 04:17PM HST
carty.s.chang@hawaii.gov
State of Hawaii
Chief Engineer

GENERAL ELECTRICAL NOTES

1. ELECTRICAL WORK SHALL BE DONE IN ACCORDANCE WITH THE 2017 NATIONAL ELECTRICAL CODE AND LOCAL ORDINANCES. CONTRACTOR SHALL OBTAIN AND PAY FOR NECESSARY PERMITS.
2. CONTRACTORS SHALL VISIT SITE AND FAMILIARIZE THEMSELVES WITH DETAILS OF THE WORK AND EXISTING FIELD CONDITIONS PRIOR TO START OF WORK. BID SUBMISSION SHALL BE CONSIDERED AS EVIDENCE THAT THE CONTRACTOR HAS VISITED THE SITE AND ENDEAVORED TO RESOLVE QUESTIONS AND DISCREPANCIES PRIOR TO SUBMITTING A BID.
3. CONTRACTOR SHALL PROVIDE A COMPLETE AND OPERATIONAL ELECTRICAL SYSTEM. RELOCATE EXISTING EQUIPMENT, CONDUIT AND WIRING AS NECESSARY TO ACCOMMODATE NEW WORK.
4. THE ELECTRICAL CONTRACTOR SHALL COORDINATE HIS WORK WITH OTHER TRADE CONTRACTORS FOR SPACE REQUIREMENTS, ETC. COORDINATE NEW LIGHT FIXTURE LOCATIONS WITH MECHANICAL CONTRACTOR PRIOR TO START OF MECHANICAL, AND PLUMBING WORK.
5. SHOULD THE CONTRACTOR FIND DISCREPANCIES IN THE CONTRACT DOCUMENTS, HE SHALL IMMEDIATELY OBTAIN CLARIFICATION FROM THE ARCHITECT.
6. THE ELECTRICAL DRAWINGS ARE SCHEMATIC AND ARE NOT INTENDED TO SHOW THE EXACT LOCATION OF CONDUITS, OUTLETS, ETC. THE CONTRACTOR SHALL REFER TO ARCHITECTURAL, STRUCTURAL, MECHANICAL, AND PLUMBING DRAWINGS. ELECTRICAL WORK SHALL FIT TO CONFORM WITH THE BUILDING CONSTRUCTION AND WITH THE OTHER TRADES.
7. REFER TO ARCHITECTURAL DRAWINGS FOR ADDITIONAL GENERAL NOTES.
8. THE CONTRACTOR SHALL PAY FOR ALL THE ELECTRICAL COSTS (INCLUDING CONNECTION, MONTHLY USAGE, DEMAND, CUSTOMER, SURCHARGES AND BASE RATE CHARGES) UNTIL THE PROJECT IS COMPLETED AND ACCEPTED BY THE STATE.
9. THE CONTRACTOR SHALL COORDINATE WITH THE ELECTRIC UTILITY COMPANY TO CONNECT THE ELECTRIC POWER PRIOR TO START OF WORK.
10. FOR ALL LUMINAIRES, ALL SCREWS, NUTS, BOLTS AND WASHERS SHALL BE STAINLESS STEEL.

GENERAL DEMOLITION NOTES:

1. DEVICES, FIXTURES AND CONNECTIONS SHOWN ON DEMOLITION PLAN ARE INTENDED TO GIVE THE CONTRACTOR A GENERAL IDEA OF WHAT ELECTRICAL ITEMS ARE BEING REMOVED OR RETAINED. DEMOLITION PLANS DO NOT INDICATE COMPLETE EXISTING WIRING CONDITIONS. CONTRACTOR SHALL BE RESPONSIBLE FOR FIELD INSPECTION OF SITE TO DETERMINE ACTUAL CONDITIONS OF INSTALLATION AND QUANTITIES OF EXISTING EQUIPMENT BEFORE SUBMITTING BID.
2. DEMOLITION WORK SHALL BE PERFORMED WITH CARE NOT TO DISTURB THE OTHER EXISTING UTILITIES. BEFORE WIRING IS CUT, CONTRACTOR SHALL VERIFY USAGE OF WIRING TO BE CUT TO ASSURE THAT SERVICES REQUIRED ARE NOT DISCONNECTED. IF EXISTING UTILITIES ARE DAMAGED BY THE CONTRACTOR, THE EXISTING UTILITIES SHALL BE REPAIRED TO ITS ORIGINAL CONDITION AT THE EXPENSE OF THE CONTRACTOR.
3. DEMOLISH AND REMOVE EXISTING ITEMS AS REQUIRED TO DO NEW WORK. REMOVE WORK NOTED TO BE REMOVED ON CONSTRUCTION DRAWINGS AND UNUSED ELECTRICAL EQUIPMENT, ASSOCIATED CONDUIT AND WIRING. REPAIR AND REPLACE EXISTING STRUCTURES, EQUIPMENT, CABLES, OR UTILITIES THAT MAY BE DAMAGED DURING THE COURSE OF CONSTRUCTION TO A CONDITION THAT IS EQUAL OR BETTER THAN EXISTING CONDITION.
4. CONCEALED CONDUIT THAT CANNOT BE REMOVED DUE TO INACCESSIBILITY MAY BE ABANDONED. CONDUCTORS SHALL BE REMOVED AND CONDUIT CUT FLUSH WITH SURFACE AND PATCHED TO MATCH EXISTING SURFACE.
5. WHEN EXISTING DEVICES, EQUIPMENT, ETC. ARE NOTED TO BE REMOVED AND THE CIRCUIT(S) SERVING SUCH ITEMS SERVES OTHER ITEMS OR DEVICES WHICH ARE TO BE MAINTAINED, THE CONTRACTOR SHALL REROUTE, EXTEND, MODIFY, ETC. EXISTING CIRCUITS AS REQUIRED TO MAINTAIN COMPLETE AND OPERATING SYSTEMS.
6. CONTRACTOR SHALL REMOVE EXISTING CONDUITS, WIRING, AND ANY OTHER CABLING BACK TO SOURCE THAT IS NO LONGER IN USE.
7. CONTRACTOR IS RESPONSIBLE FOR THE DISPOSAL OF ITEMS TO BE DEMOLISHED.

ELECTRICAL SYMBOLS

REMOVE	EXIST	NEW	
			LIGHT POLE WITH LED LUMINAIRE
			LED FLOOD LIGHT LUMINAIRE, WALL MOUNTED
			2'x4' FLUORESCENT LUMINAIRE, CEILING MOUNTED
			1'x8' FLUORESCENT LUMINAIRE, CEILING MOUNTED
			FLUORESCENT LUMINAIRE, CEILING MOUNTED
			FLUORESCENT STRIP LUMINAIRE, CEILING MOUNTED
			FLUORESCENT LUMINAIRE, WALL MOUNTED
			FLUORESCENT FLOOD LIGHT, CEILING MOUNTED
			2'x2' LED LUMINAIRE, CEILING MOUNTED
			1'x4' LED LUMINAIRE, CEILING MOUNTED
			1'x4' LED LUMINAIRE, SUSPENDED MOUNT
			1'x8' LED LUMINAIRE, SUSPENDED MOUNT
			EXIT LIGHT, CEILING MOUNTED, BLACKENED SEGMENT INDICATES ILLUMINATED SIDES AND ARROWS INDICATE DIRECTIONAL ARROWS
			EXIT LIGHT, WALL MOUNTED, BLACKENED SEGMENT INDICATES ILLUMINATED SIDES AND ARROWS INDICATE DIRECTIONAL ARROWS
			EMERGENCY LED WALL PACK LUMINAIRE, WALL MOUNTED
		A	LUMINAIRE TYPE
		S	SWITCH, 1P20A, +42"
		S_3	SWITCH, 3-WAY, +42"
		S_4	SWITCH, 4-WAY, +42"
		D	DIMMER SWITCH, +42"
		OS	OCCUPANCY SENSOR LIGHT SWITCH, WALL MOUNTED, +42"
		OS	OCCUPANCY SENSOR LIGHT SWITCH, CEILING MOUNTED
			DUPLEX CONVENIENCE OUTLET, 3W, 15A, 125V, GROUNDING TYPE, +18" UNLESS OTHERWISE NOTED
			DUPLEX CONVENIENCE RECEPTACLE, 3W, 15A, 125V, GROUND FAULT INTERRUPTING TYPE, +18" UNLESS OTHERWISE NOTED
		WP	DUPLEX CONVENIENCE RECEPTACLE, 3W, 15A, 125V, GROUND FAULT INTERRUPTING TYPE, WEATHERPROOF COVER +18" UNLESS OTHERWISE NOTED
			FLOOR OUTLET, DUPLEX, 15A, 125V, GROUNDING TYPE WITH HINGED COVER
			COMBINATION FLOOR/DATA OUTLET, DUPLEX, 15A, 125V, GROUNDING TYPE WITH HINGED COVER
			SINGLE 125V RECEPTACLE, +90"
			COMBINATION TELEPHONE/DATA OUTLET, WALL MOUNTED, +18" UNLESS OTHERWISE NOTED
			TELEPHONE OUTLET, WALL MOUNTED
		J	JUNCTION BOX, ABOVE CEILING, 4 11/16" SQUARE MINIMUM
			JUNCTION BOX, WALL MOUNTED, 4 11/16" SQUARE MINIMUM
			JUNCTION BOX WITH BLANK PLATE, WALL MOUNTED, 4 11/16" SQUARE MINIMUM
			WATER HEATER CONNECTION
		M	MOTOR CONNECTION
			MOTOR CONTROLLER
			SAFETY DISCONNECT SWITCH
		M S_M	FCU CONNECTION WITH MOTOR RATED 1P20A DISCONNECT SWITCH
		EF M S	EXHAUST FAN CONNECTION WITH MOTOR RATED 1P20A DISCONNECT SWITCH
			FIRE ALARM SMOKE DETECTOR, STAND ALONE, CEILING MOUNTED
			PANELBOARD
			TELEPHONE CABINET
			TELEPHONE TERMINAL BOARD
			CONDUIT STUB
			WIRING IN RACEWAY CONCEALED IN WALL OR CEILING
			WIRING IN FLEXIBLE RACEWAY, 6 FEET MAXIMUM
W			WIRING IN SURFACE MOUNTED RACEWAY

NOTES:

1. ANY CIRCUIT WITH NO FURTHER DESIGNATION INDICATES A TWO WIRE CIRCUIT. CIRCUITS WITH ADDITIONAL WIRES ARE INDICATED AS FOLLOWS —//—, 3 WIRES: —///—, 4 WIRES, ETC.
2. —E— INDICATES GROUNDING CONDUCTOR SIZED PER NATIONAL ELECTRICAL CODE ARTICLE 250.122.
3. PROVIDE GROUNDING CONDUCTOR IN ALL RACEWAYS.

HAWAII COUNTY ENERGY CODE

2018 IECC, HAWAII REVISED STATUES HRS 107-24 TO 28 & HAWAII ADMINISTRATIVE RULES HAR 3-181.1

COMMERCIAL BUILDING ENERGY EFFICIENCY STANDARDS

I CERTIFY THAT, TO THE BEST OF MY KNOWLEDGE, THIS PROJECTS DESIGN SUBSTANTIALLY CONFORMS TO THE BUILDING ENERGY EFFICIENCY STANDARDS PERTAINING TO THE COMMERCIAL PROVISIONS FOR ELECTRICAL AND LIGHTING SYSTEMS (C405 & C408) OF THE 2018 IECC WITH AMENDMENTS PER HAR 3-181.1:

STATE AMENDMENTS: EFFECTIVE FOR NEW APPLICATIONS BEGINNING 09/01/2021
COUNTY AMENDMENTS: PENDING

COMPLIANCE METHOD
- ☐ 2018 IECC as amended. Mandatory & Prescriptive
- ☒ 2018 IECC as amended. Mandatory & Total Building Performance
- ☐ ASHRAE Standard 90.1-2016. Mandatory & Prescriptive
- ☐ ASHRAE Standard 90.1-2016. Mandatory & Energy Cost Budget

INFORMATION IN CONSTRUCTION DOCUMENTS	YES	N/A
Interior Lighting		
Occupant sensor controls. C405.2.1	☒	☐
Time switch controls. C405.2.2	☒	☐
Daylight responsive controls. C405.2.3	☐	☒
Daylight zones on plans. C405.2.3.2 & C405.2.3.3	☐	☒
Guest room controls. C405.2.4	☐	☒
Interior lighting fixture schedule	☒	☐
Interior lighting power allowances. C405.3.2	☒	☐
Interior lighting fixture locations	☒	☐
Lighting control functional performance testing requirement. C408.3	☒	☐
Exterior lighting		
Exterior lighting controls. C405.2.6	☒	☐
Exterior lighting fixture schedule	☒	☐
Exterior lighting power allowances. C405.4.2	☒	☐
Exterior lighting fixture locations	☒	☐
Electrical		
Electrical transformer efficiency. C405.6	☐	☒
Electrical motor efficiency. C405.7	☐	☒
Voltage drop less than 5%. C405.9	☐	☒
Tenant submetering. C405.10	☐	☒

NOTES

SIGNATURE: DATE: 11-16-22

Name: JOHN NOMURA
TITLE: VICE PRESIDENT
License No.: 11670-E
Project Name.: HAWAII DISTRICT LAND OFFICE
Project TMK: (3) 2-2-032: 011

JOHN M. NOMURA LICENSED PROFESSIONAL ENGINEER No. 11670-E HAWAII, U.S.A.

REVISION NO.	SYM.	DESCRIPTION	SHT./OF	DATE	APPROVED

JOHN M. NOMURA LICENSED PROFESSIONAL ENGINEER No. 11670-E HAWAII, U.S.A.

THIS LICENSE EXPIRES APRIL 30, 2024

SIGNATURE

THIS WORK WAS PREPARED BY ME OR UNDER MY SUPERVISION AND CONSTRUCTION OF THIS PROJECT WILL BE UNDER MY OBSERVATION. OBSERVATION OF CONSTRUCTION AS DEFINED IN CHAPTER 16-115 OF THE HAWAII ADMINISTRATIVE RULES, DEPARTMENT OF COMMERCE AND CONSUMER AFFAIRS ENTITLED PROFESSIONAL ENGINEERS, ARCHITECTS, SURVEYORS AND LANDSCAPE ARCHITECTS).

STATE OF HAWAII
DEPARTMENT OF LAND AND NATURAL RESOURCES
ENGINEERING DIVISION

HAWAII DISTRICT LAND OFFICE
HILO, HAWAI'I

ELECTRICAL SYMBOLS, GENERAL ELECTRICAL NOTES

DESIGNED: JN	SUBMITTED:
DRAWN: CAD	DATE: NOVEMBER 2022
CHECKED: JN	SCALE: AS NOTED
APPROVED:	Carty Chang E-signed 2022-11-28 04:17PM HST carty.s.chang@hawaii.gov State of Hawaii Chief Engineer
CHIEF ENGINEER	

DRAWING NO. E-001

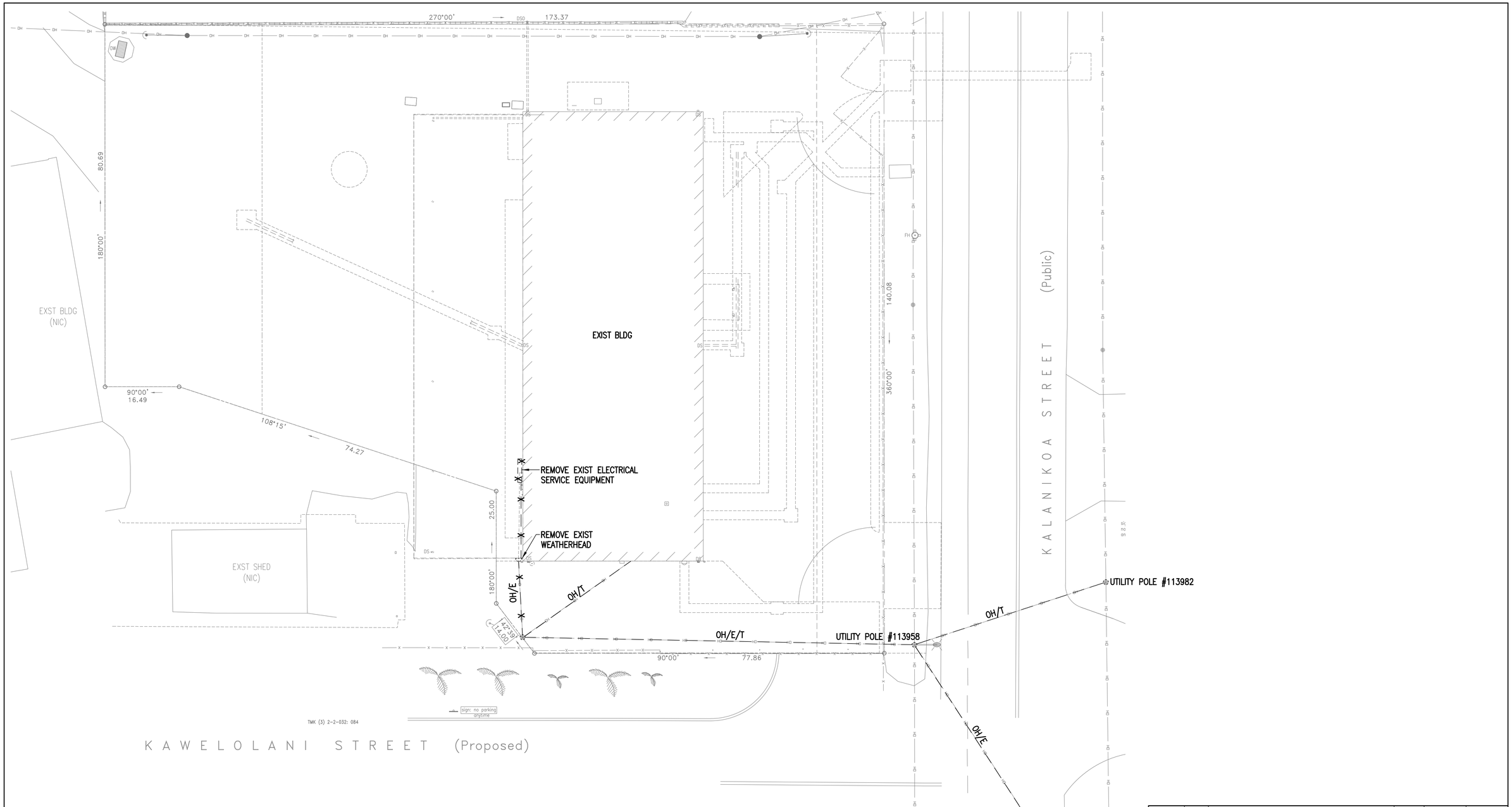

OVERALL ELECTRICAL DEMOLITION SITE PLAN

SCALE: 3/32" = 1'-0"

NORTH
WEST EAST
SOUTH

0 4' 8' 12' 16' 20' 24' 28' 32'

SCALE: 3/32" = 1'-0"

REVISION NO.	SYM.	DESCRIPTION	SHT./OF	DATE	APPROVED

JOHN M. NOMURA
LICENSED PROFESSIONAL ENGINEER
No. 11670-E
HAWAII, U.S.A.

THIS LICENSE EXPIRES APRIL 30, 2024

SIGNATURE

THIS WORK WAS PREPARED BY ME OR UNDER MY SUPERVISION AND CONSTRUCTION OF THIS PROJECT WILL BE UNDER MY OBSERVATION. OBSERVATION OF CONSTRUCTION AS DEFINED IN CHAPTER 16-115 OF THE HAWAII ADMINISTRATIVE RULES, DEPARTMENT OF COMMERCE AND CONSUMER AFFAIRS ENTITLED "PROFESSIONAL AND TECHNICAL ARCHITECTS, SURVEYORS AND LANDSCAPE ARCHITECTS".

STATE OF HAWAII
DEPARTMENT OF LAND AND NATURAL RESOURCES
ENGINEERING DIVISION

HAWAII DISTRICT LAND OFFICE
HILO, HAWAI'I

OVERALL ELECTRICAL DEMOLITION SITE PLAN

DESIGNED: JN	SUBMITTED:
DRAWN: CAD	DATE: NOVEMBER 2022
CHECKED: JN	SCALE: AS NOTED
APPROVED: CHIEF ENGINEER	Carty Chang E-signed 2022-11-28 04:17PM HST carty.s.chang@hawaii.gov State of Hawaii Chief Engineer

DRAWING NO.
E-101

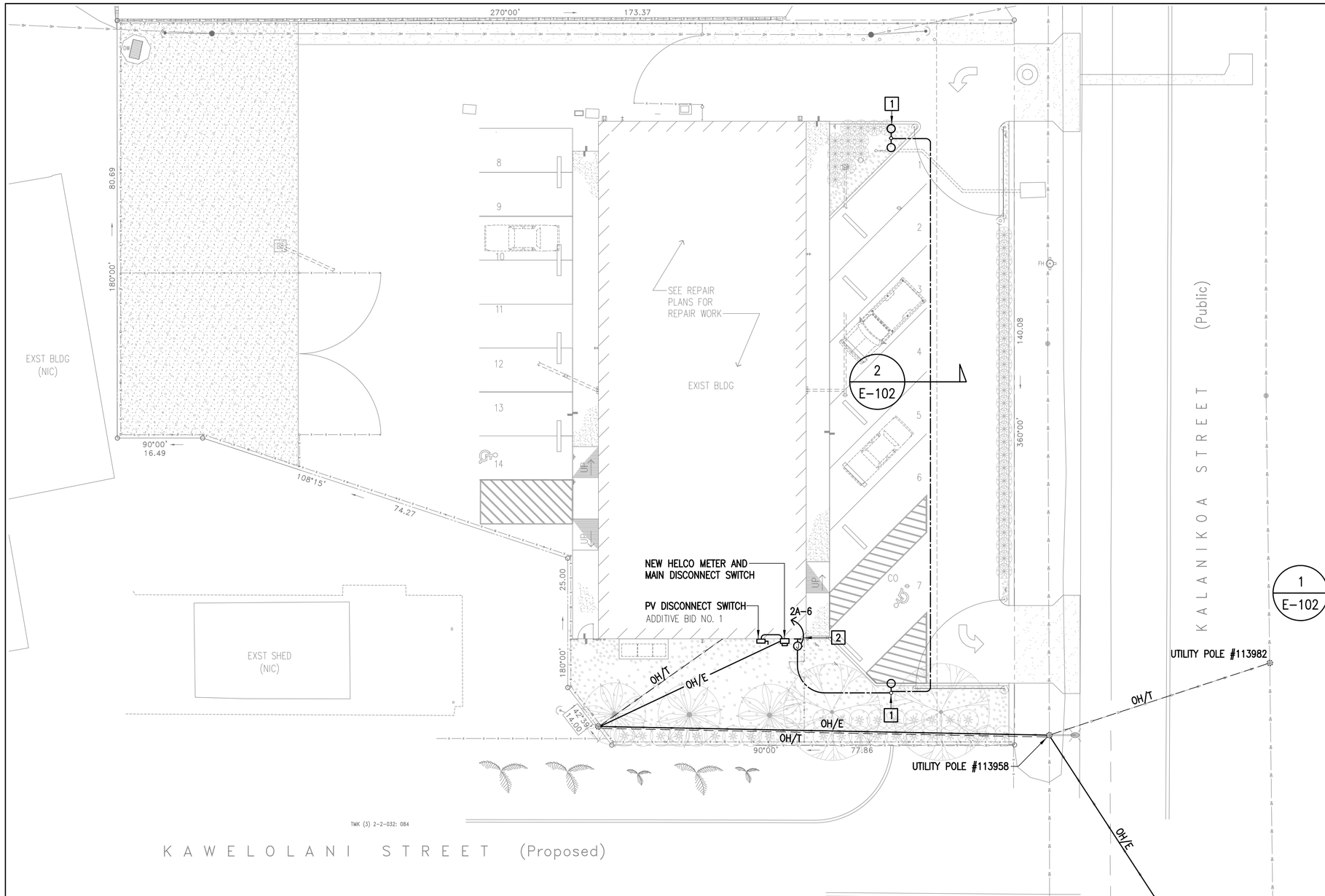

OVERALL NEW ELECTRICAL SITE PLAN

SCALE: 3/32" = 1'-0"

NORTH
WEST EAST
SOUTH

0 4' 8' 12' 16' 20' 24' 28' 32'
SCALE: 3/32" = 1'-0"

ELECTRICAL SITE PLAN NOTES:

1. NEW LIGHT POLE. SEE POLE BASE DETAIL 1/E-102 ON THIS SHEET.
2. TO PANEL "2A". DRILL AND PATCH CONCRETE WALL.

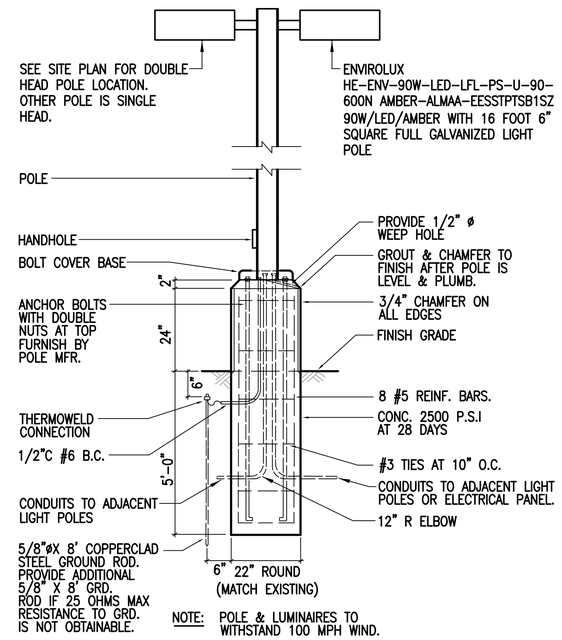

NOTE: POLE & LUMINAIRES TO WITHSTAND 100 MPH WIND.

1 / E-102 **RAISED CONCRETE BASE LIGHT POLE DETAIL**
N.T.S.

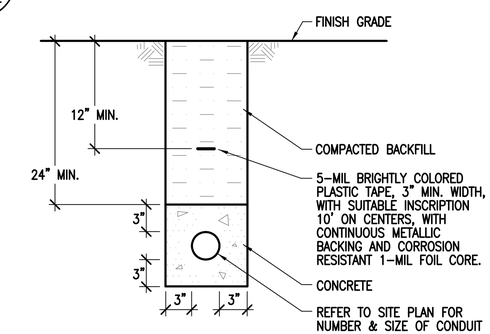

2 / E-102 **DUCT SECTION DETAIL**
N.T.S.

REVISION NO.	SYM.	DESCRIPTION	SHT./OF	DATE	APPROVED

JOHN M. NOMURA
LICENSED PROFESSIONAL ENGINEER
No. 11670-E
HAWAII, U.S.A.

THIS LICENSE EXPIRES APRIL 30, 2024

SIGNATURE

THIS WORK WAS PREPARED BY ME OR UNDER MY SUPERVISION OR COMPLETED UNDER MY DIRECT SUPERVISORY CONTROL OR OBSERVATION OF CONSTRUCTION AS DEFINED IN CHAPTER 16-115 OF THE HAWAII ADMINISTRATIVE RULES, DEPARTMENT OF COMMERCE AND CONSUMER AFFAIRS ENTITLED PROFESSIONAL ENGINEERS, ARCHITECTS, SURVEYORS AND LANDSCAPE ARCHITECTS).

STATE OF HAWAII
DEPARTMENT OF LAND AND NATURAL RESOURCES
ENGINEERING DIVISION

HAWAII DISTRICT LAND OFFICE
HILO, HAWAI'I

OVERALL NEW ELECTRICAL SITE PLAN

DESIGNED: JN	SUBMITTED:
DRAWN: CAD	DATE: NOVEMBER 2022
CHECKED: JN	SCALE: AS NOTED
APPROVED:	Carty Chang E-signed 2022-11-28 04:17PM HST carty.s.chang@hawaii.gov State of Hawaii Chief Engineer
CHIEF ENGINEER	DRAWING NO. E-102

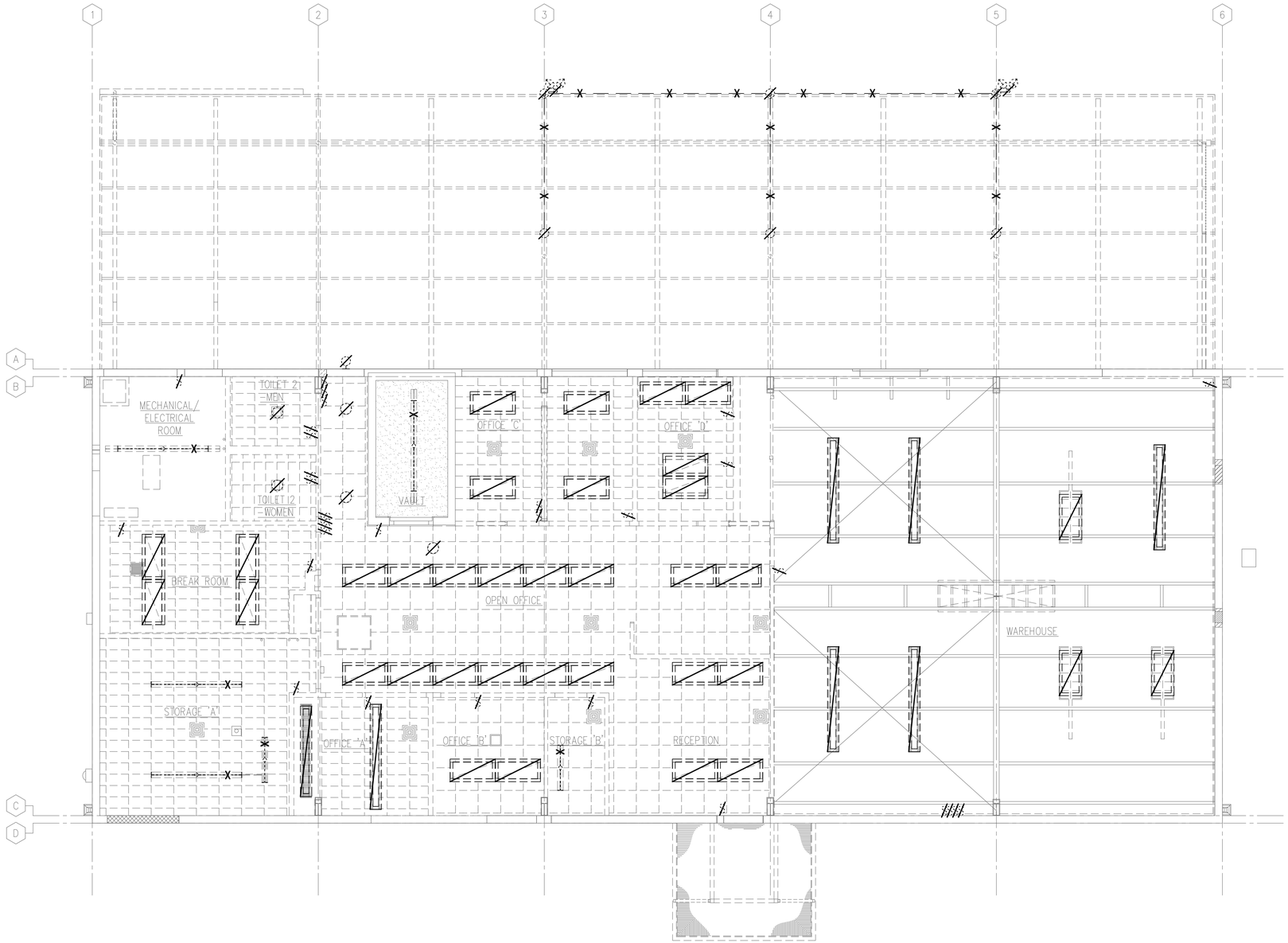

LIGHTING DEMOLITION PLAN

SCALE: 3/16" = 1'-0"

0 2' 4' 6' 8' 10 12'

SCALE: 3/16" = 1'-0"

WEST
SOUTH
NORTH
EAST

REVISION NO.	SYM.	DESCRIPTION	SHT./OF	DATE	APPROVED

JOHN M. NOMURA
LICENSED PROFESSIONAL ENGINEER
No. 11670-E
HAWAII, U.S.A.

THIS LICENSE EXPIRES APRIL 30, 2024

SIGNATURE

THIS WORK WAS PREPARED BY ME OR UNDER MY SUPERVISION AND CONSTRUCTION OF THIS PROJECT WILL BE UNDER MY OBSERVATION. (OBSERVATION OF CONSTRUCTION AS DEFINED IN CHAPTER 16-115 OF THE HAWAII ADMINISTRATIVE RULES, DEPARTMENT OF COMMERCE AND CONSUMER AFFAIRS ENTITLED "PROFESSIONAL ENGINEERS, ARCHITECTS, SURVEYORS AND LANDSCAPE ARCHITECTS).

STATE OF HAWAII
DEPARTMENT OF LAND AND NATURAL RESOURCES
ENGINEERING DIVISION

HAWAII DISTRICT LAND OFFICE

HILO, HAWAI'I

LIGHTING DEMOLITION PLAN

DESIGNED: JN	SUBMITTED:
DRAWN: CAD	DATE: NOVEMBER 2022
CHECKED: JN	SCALE: AS NOTED
APPROVED:	DRAWING NO.
CHIEF ENGINEER	E-201

Carty Chang
E-signed 2022-11-28 04:17PM HST
carty.s.chang@hawaii.gov
State of Hawaii
Chief Engineer

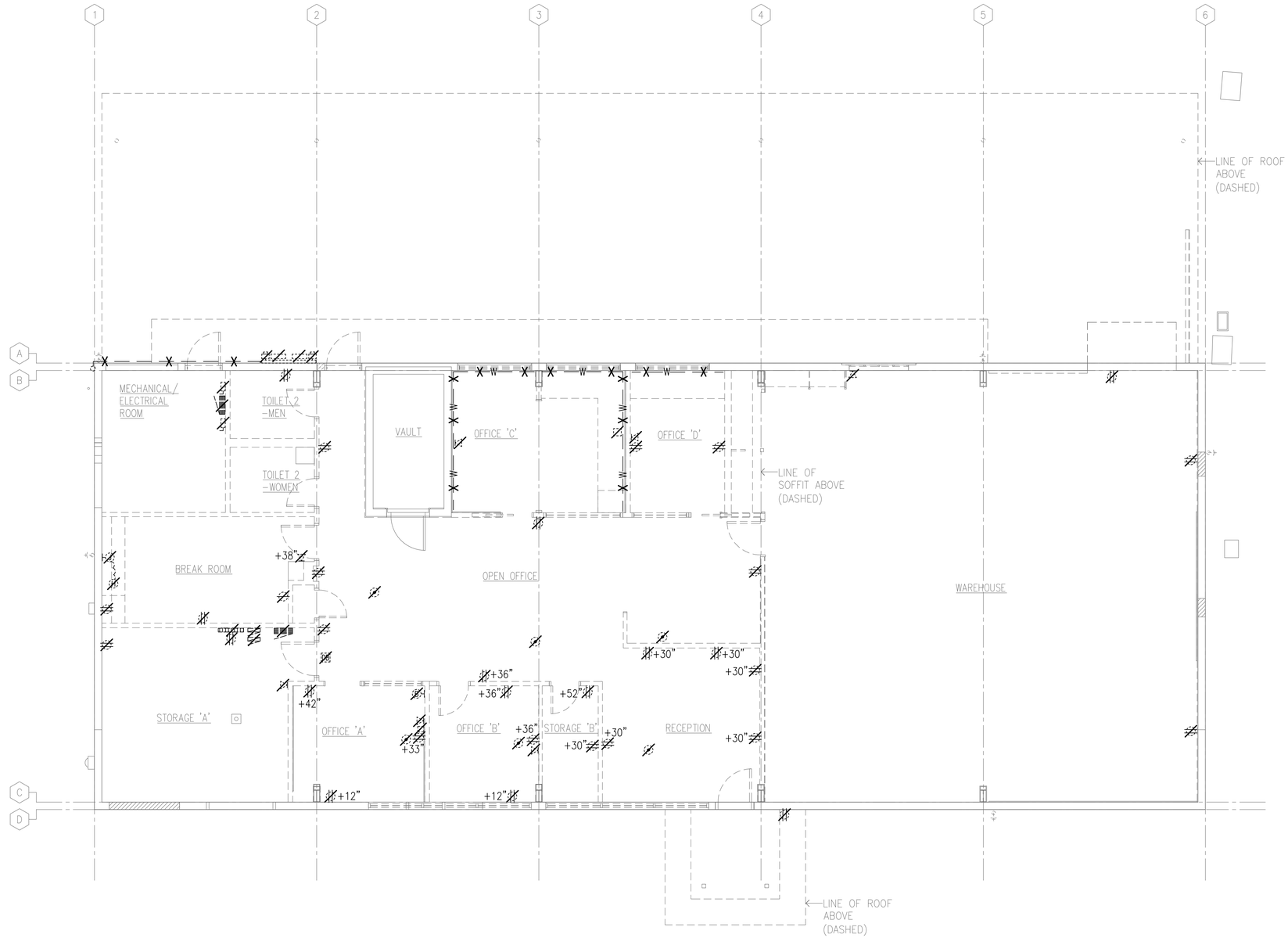

POWER & SIGNAL DEMOLITION PLAN

SCALE: 3/16" = 1'-0"

0 2' 4' 6' 8' 10 12'

SCALE: 3/16" = 1'-0"

WEST
SOUTH
NORTH
EAST

REVISION NO.	SYM.	DESCRIPTION	SHT./OF	DATE	APPROVED

JOHN M. NOMURA
LICENSED PROFESSIONAL ENGINEER
No. 11670-E
HAWAII, U.S.A.

THIS LICENSE EXPIRES APRIL 30, 2024

SIGNATURE

THIS WORK WAS PREPARED BY ME OR UNDER MY SUPERVISION AND CONSTITUTES A CONTRACT DOCUMENT FOR THE PRESERVATION, CONSERVATION, OR CONSTRUCTION AS DEFINED IN CHAPTER 16-115 OF THE HAWAII ADMINISTRATIVE RULES, DEPARTMENT OF COMMERCE AND CONSUMER AFFAIRS ENTITLED PROFESSIONAL ENGINEERS, ARCHITECTS, SURVEYORS AND LANDSCAPE ARCHITECTS).

STATE OF HAWAII
DEPARTMENT OF LAND AND NATURAL RESOURCES
ENGINEERING DIVISION

HAWAII DISTRICT LAND OFFICE

HILO, HAWAI'I

POWER AND SIGNAL DEMOLITION PLAN

DESIGNED: JN	SUBMITTED:
DRAWN: CAD	DATE: NOVEMBER 2022
CHECKED: JN	SCALE: AS NOTED
APPROVED:	Carty Chang E-signed 2022-11-28 04:17PM HST carty.s.chang@hawaii.gov State of Hawaii Chief Engineer
CHIEF ENGINEER	

DRAWING NO.
E-202

GENERAL LIGHTING NOTES

1. EXTERIOR CONDUITS AND JUNCTION BOXES SHALL BE PAINTED TO MATCH ADJACENT WALL COLOR. TYPICAL.
2. INSTALL SEPARATE NEUTRAL CONDUCTOR WITH EACH PHASE CONDUCTOR. DO NOT SHARE NEUTRAL WIRES.

NEW LIGHTING PLAN NOTES

1. DRILL THROUGH CONCRETE WALL. PATCH AROUND CONDUIT PENETRATION.
2. PENDANT MOUNT LUMINAIRE +9'-0" AFF TO BOTTOM OF LUMINAIRE.
3. MOUNT UNDER CABINET.
4. MOUNT TIME CLOCK AND LIGHTING CONTACTOR ABOVE PANEL. SEE NIGHT LIGHT DIAGRAM ON SHEET E-502 FOR ADDITIONAL INFORMATION.
5. STEM MOUNT CEILING OCCUPANCY SENSOR +9'-0" AFF.
6. STEM MOUNT EXIT SIGN +9'-0" AFF.
7. CONDUITS PENETRATIONS THROUGH 1-HOUR RATED WALL SHALL BE FIRESTOPPED WITH APPROVED UL LISTED FIRESTOPPING MATERIAL. SEE CONDUIT PENETRATION OF FIRE WALL DETAIL ON SHEET E-502.
8. WALL MOUNT LUMINAIRE AT +7'-0" AFF FROM TOP OF LUMINAIRE HOUSING.

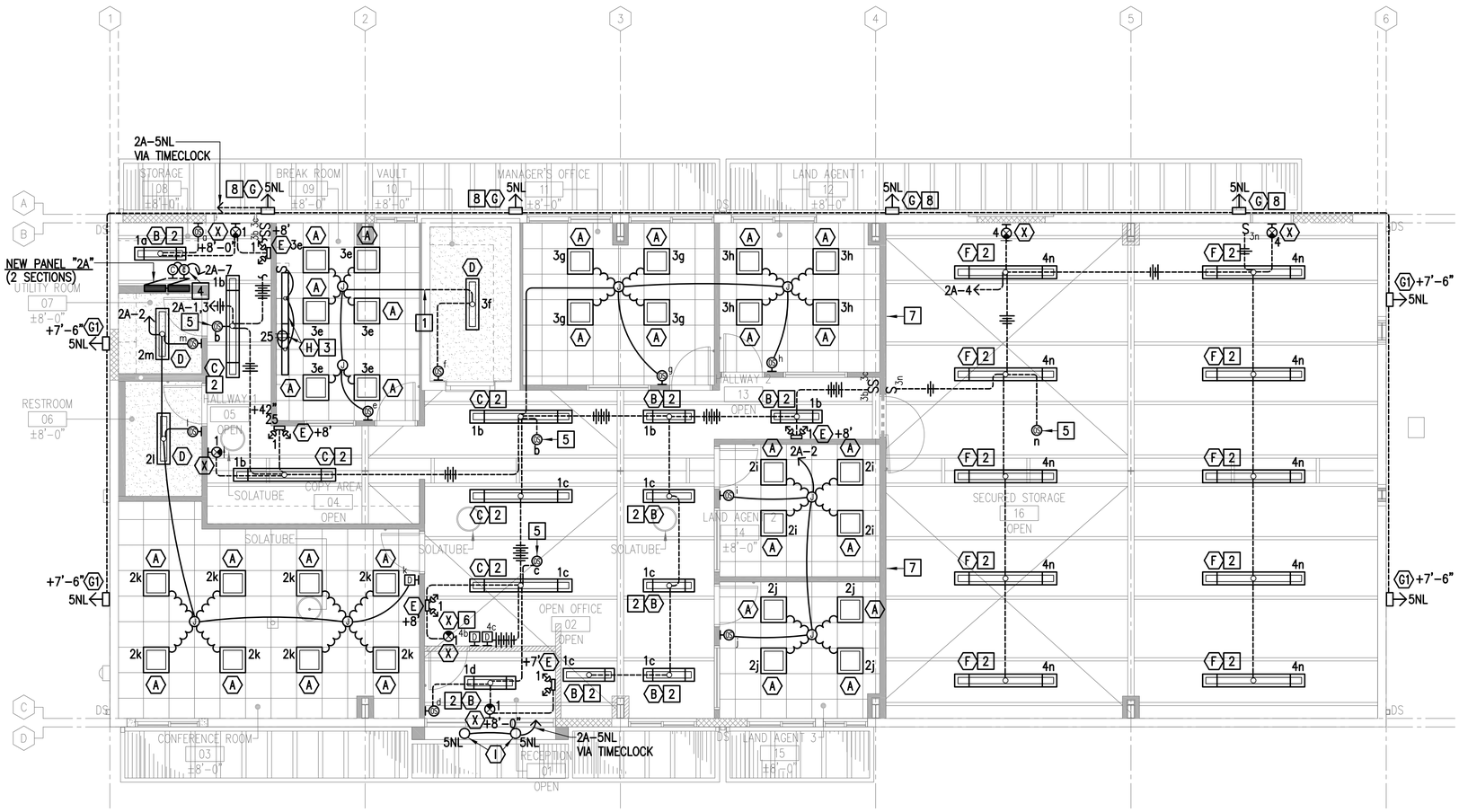

NEW LIGHTING PLAN

SCALE: 3/16" = 1'-0"

0 2' 4' 6' 8' 10 12'

SCALE: 3/16" = 1'-0"

WEST SOUTH NORTH EAST

REVISION NO.	SYM.	DESCRIPTION	SHT./OF	DATE	APPROVED

JOHN M. NOMURA
LICENSED PROFESSIONAL ENGINEER
No. 11670-E
HAWAII, U.S.A.

THIS LICENSE EXPIRES APRIL 30, 2024

SIGNATURE

THIS WORK WAS PREPARED BY ME, OR UNDER MY SUPERVISION AND CONSTRUCTION OF THIS PROJECT WILL BE SUPERVISED BY A LICENSED PROFESSIONAL ENGINEER OR CONSTRUCTION AS DEFINED IN CHAPTER 16-115 OF THE HAWAII ADMINISTRATIVE RULES, DEPARTMENT OF COMMERCE AND CONSUMER AFFAIRS ENTITLED PROFESSIONAL ENGINEERS, ARCHITECTS, SURVEYORS AND LANDSCAPE ARCHITECTS).

STATE OF HAWAII
DEPARTMENT OF LAND AND NATURAL RESOURCES
ENGINEERING DIVISION

HAWAII DISTRICT LAND OFFICE
HILO, HAWAI'I

NEW LIGHTING PLAN

DESIGNED: JN	SUBMITTED:
DRAWN: CAD	DATE: NOVEMBER 2022
CHECKED: JN	SCALE: AS NOTED
APPROVED: CHIEF ENGINEER	Carty Chang, E-signed 2022-11-28 04:17PM HST, carty.s.chang@hawaii.gov, State of Hawaii, Chief Engineer

DRAWING NO. E-301

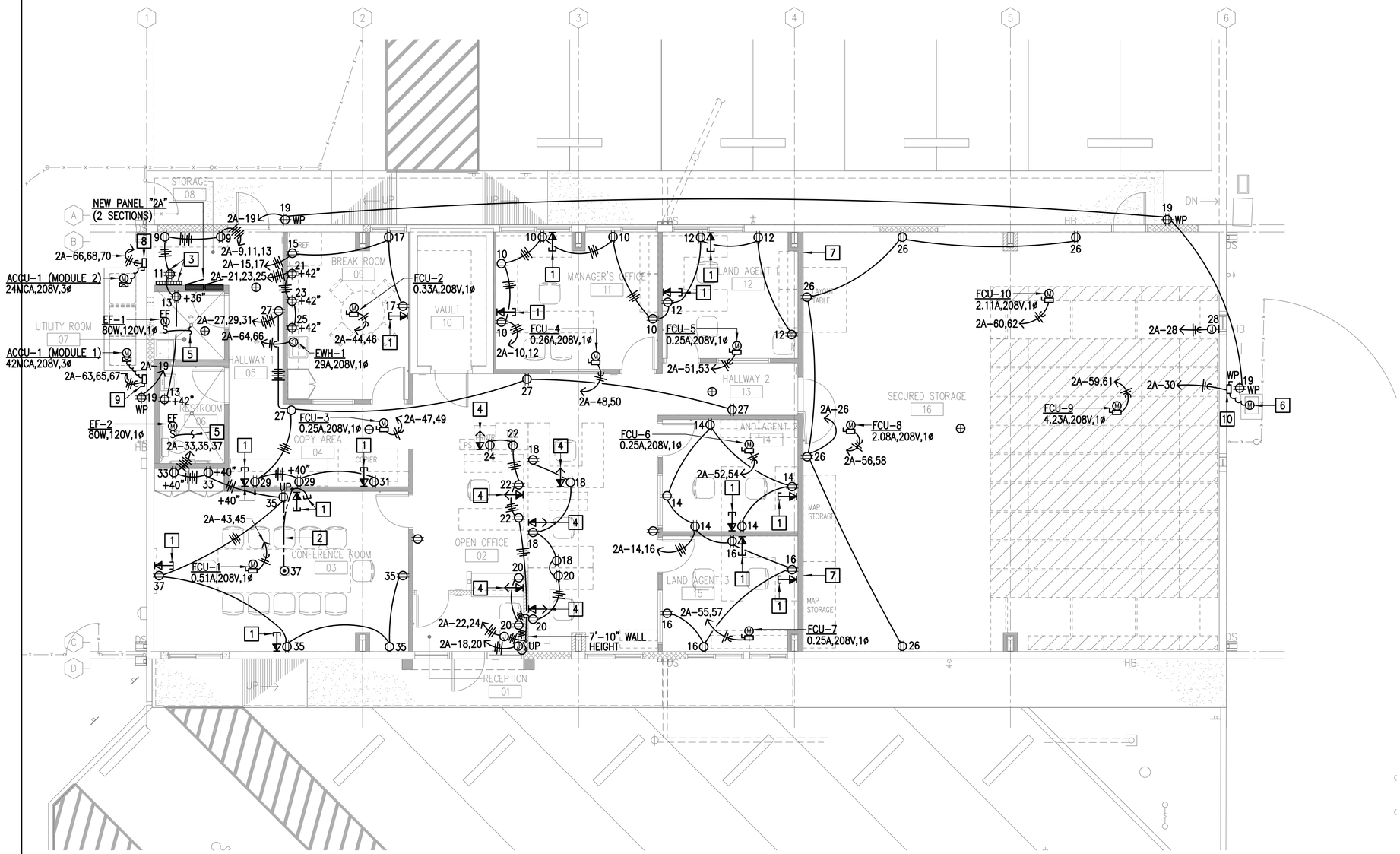

NEW POWER & SIGNAL PLAN

SCALE: 3/16" = 1'-0"

GENERAL POWER & SIGNAL NOTE

1. INSTALL SEPARATE NEUTRAL CONDUCTOR WITH EACH PHASE CONDUCTOR. DO NOT SHARE NEUTRAL WIRES.

NEW POWER & SIGNAL NOTES

1. 1"C WITH TWO CAT6 CABLES TO TELECOMMUNICATION EQUIPMENT RACK. REFER TO TELECOMMUNICATION DETAILS ON SHEET E-501 FOR ADDITIONAL REQUIREMENTS.
2. SAWCUT EXISTING CONCRETE SLAB. INSTALL ONE 3/4"C FOR POWER AND ONE 1"C WITH PULLSTRING FOR DATA CONDUIT. PATCH CONCRETE TO BE LEVEL WITH EXISTING FLOOR.
3. TELECOMMUNICATION BACKBOARD. FIELD COORDINATE EXACT BACKBOARD SIZE AND LOCATION WITH DLNR IT DEPARTMENT PRIOR TO START OF WORK. MOUNT QUAD RECEPTACLE AT BOTTOM OF BACKBOARD.
4. PROVIDE 1"C WITH TWO CAT 6 CABLES FROM EACH TELECOM OUTLET. RUN CONDUIT INSIDE LOW HEIGHT WALL UP TO FULL HEIGHT WALL TO TELECOMMUNICATION EQUIPMENT RACK. PAINT EXPOSED CONDUITS TO MATCH OPEN CEILING COLOR. REFER TO TELECOMMUNICATION DETAILS ON SHEET E-501 FOR ADDITIONAL REQUIREMENTS.
5. INTERLOCK EXHAUST FAN WITH LIGHT SWITCH. CONNECT TO LIGHTING BRANCH CIRCUIT WITHIN BATHROOM.
6. ELECTRONIC GATE CONTROLLER. FIELD COORDINATE CONNECTION REQUIREMENTS WITH GATE INSTALLER PRIOR TO START OF WORK.
7. CONDUITS PENETRATIONS THROUGH 1-HOUR RATED WALL SHALL BE FIRESTOPPED WITH APPROVED UL LISTED FIRESTOPPING MATERIAL. SEE CONDUIT PENETRATION OF FIRE WALL DETAIL ON SHEET E-502.
8. 3P30A N.F. DISCONNECT SWITCH. NEMA 4X STAINLESS STEEL.
9. 3P60A N.F. DISCONNECT SWITCH. NEMA 4X STAINLESS STEEL.
10. 1P30A N.F. DISCONNECT SWITCH. NEMA 4X STAINLESS STEEL.

0 2' 4' 6' 8' 10 12'

SCALE: 3/16" = 1'-0"

WEST
SOUTH NORTH
EAST

REVISION NO.	SYM.	DESCRIPTION	SHT./OF	DATE	APPROVED

JOHN M. NOMURA
LICENSED PROFESSIONAL ENGINEER
No. 11670-E
HAWAII, U.S.A.

THIS LICENSE EXPIRES APRIL 30, 2024

SIGNATURE

THIS WORK WAS PREPARED BY ME OR UNDER MY SUPERVISION AND CONSTRUCTION OF THIS PROJECT WILL BE UNDER MY OBSERVATION. (OBSERVATION OF CONSTRUCTION AS DEFINED IN CHAPTER 16-115 OF THE HAWAII ADMINISTRATIVE RULES, DEPARTMENT OF COMMERCE AND CONSUMER AFFAIRS, ENTITLED PROFESSIONAL ENGINEERS, ARCHITECTS, SURVEYORS AND LANDSCAPE ARCHITECTS).

STATE OF HAWAII
DEPARTMENT OF LAND AND NATURAL RESOURCES
ENGINEERING DIVISION

HAWAII DISTRICT LAND OFFICE
HILO, HAWAI'I

NEW POWER AND SIGNAL PLAN

DESIGNED: JN	SUBMITTED:
DRAWN: CAD	DATE: NOVEMBER 2022
CHECKED: JN	SCALE: AS NOTED
APPROVED: CHIEF ENGINEER	DRAWING NO. E-302

Carty Chang
E-signed 2022-11-28 04:17PM HST
carty.s.chang@hawaii.gov
State of Hawaii
Chief Engineer

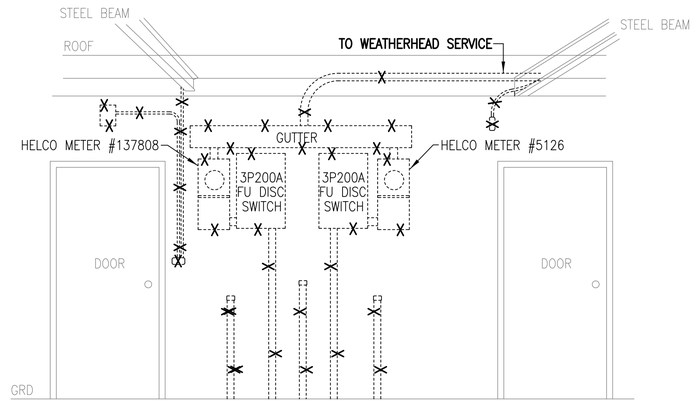

EXISTING SERVICE EQUIPMENT NOTES

1. REMOVE ALL EXISTING ELECTRICAL SERVICE EQUIPMENT, CONDUIT AND WIRING. COORDINATE WITH HELCO FOR METER REMOVAL PRIOR TO START OF WORK.
2. CUT EXISTING CONDUITS GOING UNDER GROUND AND REMOVE WIRING. PATCH SIDEWALK TO BE LEVEL AND MATCH CONCRETE SURFACE.
3. PATCH EXISTING CMU WALL WHERE APPARATUS EQUIPMENT AND CONDUITS ARE REMOVED. PATCH TO MATCH EXISTING SURFACE.

EXISTING SERVICE EQUIPMENT DEMOLTION DETAIL

NOT TO SCALE

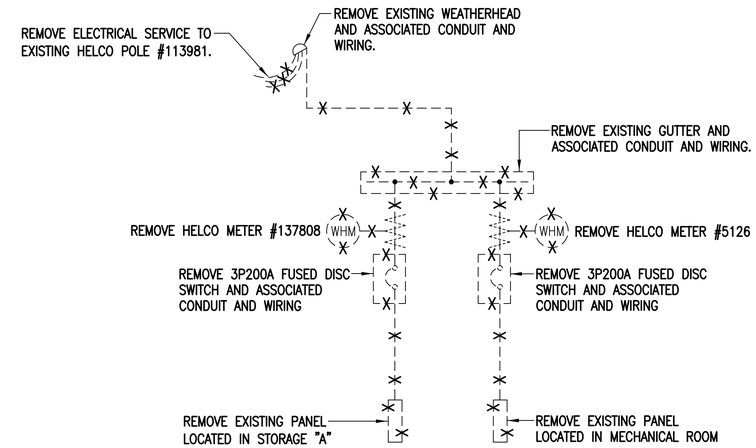

DEMOLITION SINGLE LINE DIAGRAM NOTES

1. CONTRACTOR SHALL COORDINATE WITH HELCO FOR EXISTING SERVICE REMOVAL PRIOR TO START OF WORK.
2. REMOVE ALL EXISTING SERVICE EQUIPMENT, CONDUIT AND WIRING.

DEMOLITION SINGLE LINE DIAGRAM

NOT TO SCALE

REVISION NO.	SYM.	DESCRIPTION	SHT./OF	DATE	APPROVED

JOHN M. NOMURA
LICENSED PROFESSIONAL ENGINEER
No. 11670-E
HAWAII, U.S.A.

THIS LICENSE EXPIRES APRIL 30, 2024

SIGNATURE

THIS WORK WAS PREPARED BY ME OR UNDER MY SUPERVISION AND CONSTRUCTION OF THIS PROJECT WILL BE UNDER MY OBSERVATION. (OBSERVATION OF CONSTRUCTION AS DEFINED IN CHAPTER 16-115 OF THE STATE BOARD OF REGISTRATION FOR PROFESSIONAL ENGINEERS, ARCHITECTS, SURVEYORS AND LANDSCAPE ARCHITECTS).

STATE OF HAWAII
DEPARTMENT OF LAND AND NATURAL RESOURCES
ENGINEERING DIVISION

HAWAII DISTRICT LAND OFFICE
HILO, HAWAI'I

EXISTING SERVICE EQUIPMENT DEMOLITION DETAIL, DEMOLITION SINGLE LINE DIAGRAM

DESIGNED: JN	SUBMITTED:
DRAWN: CAD	DATE: NOVEMBER 2022
CHECKED: JN	SCALE: AS NOTED
APPROVED: CHIEF ENGINEER	Carty Chang E-signed 2022-11-28 04:17PM HST carty.s.chang@hawaii.gov State of Hawaii Chief Engineer

DRAWING NO. E-401

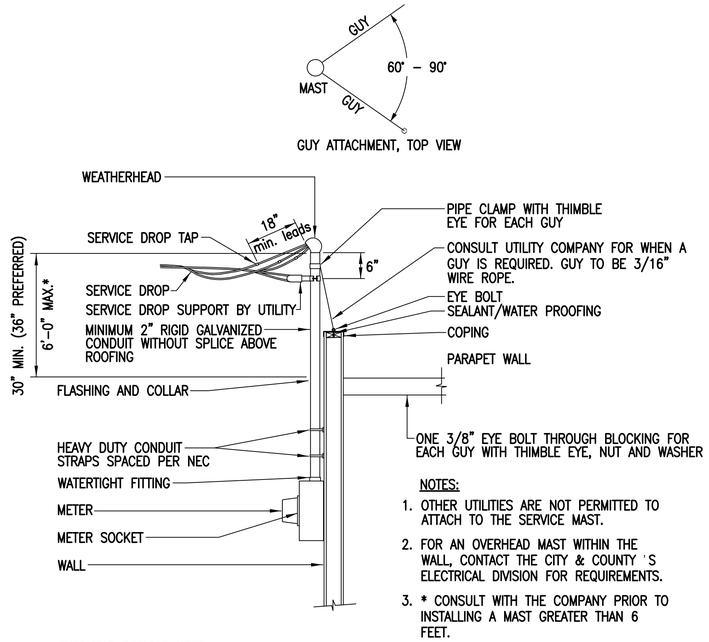

NOTES:

1. OTHER UTILITIES ARE NOT PERMITTED TO ATTACH TO THE SERVICE MAST.
2. FOR AN OVERHEAD MAST WITHIN THE WALL, CONTACT THE CITY & COUNTY 'S ELECTRICAL DIVISION FOR REQUIREMENTS.
3. * CONSULT WITH THE COMPANY PRIOR TO INSTALLING A MAST GREATER THAN 6 FEET.

OVERHEAD SERVICE NOTE:

CUSTOMER'S SERVICE ENTRANCE CONDUCTORS MUST BE LONG ENOUGH TO REACH THE SERVICE DROP TAP, PLUS AN ADDITIONAL 18 INCHES FOR FORMING A DRIP LOOP.

OVERHEAD SERVICE DETAIL

NOT TO SCALE

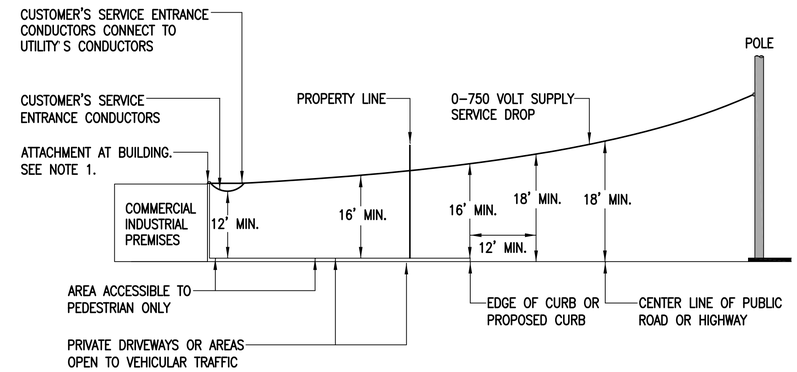

SERVICE DROP CLEARANCES NOTES:

1. THE RADIAL CLEARANCE BETWEEN SUPPLY SERVICE DROP CONDUCTORS AND COMMUNICATION SERVICE DROP CONDUCTORS SHALL BE NOT LESS THAN 24 INCHES. WHERE WITHIN 15 FEET OF THE POINT OF ATTACHMENT OF EITHER SERVICE DROP, THIS CLEARANCE MAY BE REDUCED TO 12 INCHES.
2. THE MINIMUM VERTICAL CLEARANCE ABOVE BRIDGES, FENCES, WALLS OR OTHER STRUCTURES UPON WHICH PEOPLE CAN WALK, IS 8 FEET. FOR VERTICAL CLEARANCE ABOVE BUILDINGS, SEE NESC.

SERVICE DROP CLEARANCES DETAIL

NOT TO SCALE

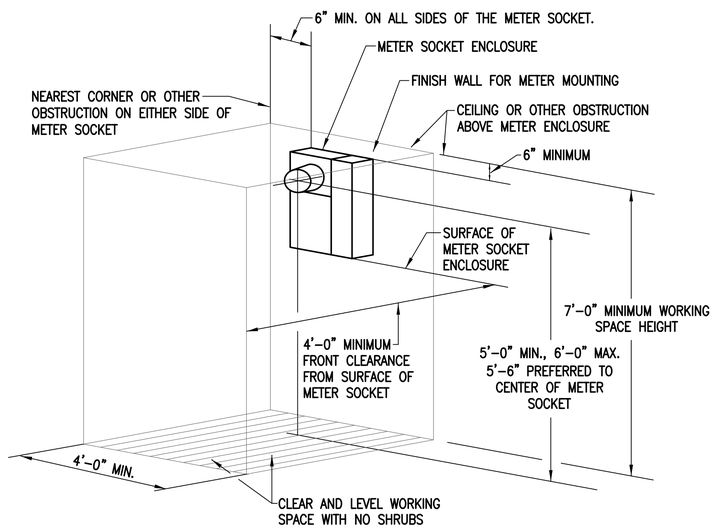

CLEARANCES AROUND METERING EQUIPMENT NOTES

THE FOLLOWING CLEARANCES SHALL BE PROVIDED AROUND ALL METERING EQUIPMENT:

1. EQUIPMENT CLEARANCE OF SIX INCHES AROUND METERING EQUIPMENT (ABOVE, BELOW, AND TO THE SIDES). THIS CLEARANCE SHALL BE MAINTAINED FROM ANY CORNER, DOOR, ENTRYWAY, WINDOW, OBSTRUCTION, OR TO ANY LOAD SIDE EQUIPMENT.
2. FRONTAL WORKING CLEARANCE OF 4 FEET BY 4 FEET BY 7 FEET. WHERE THE TOTAL WIDTH OF THE METERING INSTALLATION IS GREATER THAN 4 FEET, THIS CLEARANCE SHALL BE WIDENED ACCORDINGLY. THIS WORKING CLEARANCE SHALL BE LEVEL AND CLEAR TO ALLOW FOR THE USE OF A LADDER. IN ADDITION, THIS WORKING CLEARANCE SHALL BE KEPT FREE FROM ANY OBSTRUCTIONS SUCH AS WALLS, FENCES, TREES, HEDGES, OTHER STRUCTURES, AND EQUIPMENT.

METER CLEARANCES DETAIL

NOT TO SCALE

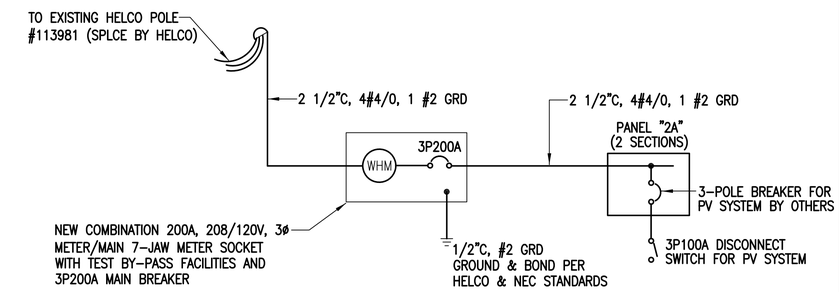

NOTE:

1. PROVIDE PROVISIONS FOR PV SYSTEM.

NEW SINGLE LINE DIAGRAM

NOT TO SCALE

REVISION NO.	SYM.	DESCRIPTION	SHT./OF	DATE	APPROVED

JOHN M. NOMURA
LICENSED PROFESSIONAL ENGINEER
No. 11670-E
HAWAII, U.S.A.

THIS LICENSE EXPIRES APRIL 30, 2024

SIGNATURE

THIS WORK WAS PREPARED BY ME OR UNDER MY SUPERVISION AND THE DESIGN OF THIS PROJECT WILL BE UNDER MY OBSERVATION. OBSERVATION OF CONSTRUCTION AS DEFINED IN CHAPTER 16-115 OF THE HAWAII ADMINISTRATIVE RULES, DEPARTMENT OF COMMERCE AND CONSUMER AFFAIRS ENTITLED PROFESSIONAL ENGINEERS, ARCHITECTS, SURVEYORS AND LANDSCAPE ARCHITECTS).

STATE OF HAWAII
DEPARTMENT OF LAND AND NATURAL RESOURCES
ENGINEERING DIVISION

HAWAII DISTRICT LAND OFFICE
HILO, HAWAI'I

ELECTRICAL DETAILS, NEW SINGLE LINE DIAGRAM

DESIGNED: JN	SUBMITTED:
DRAWN: CAD	DATE: NOVEMBER 2022
CHECKED: JN	SCALE: AS NOTED
APPROVED:	Carty Chang E-signed 2022-11-28 04:17PM HST carty.s.chang@hawaii.gov State of Hawaii Chief Engineer
CHIEF ENGINEER	

DRAWING NO.
E-402

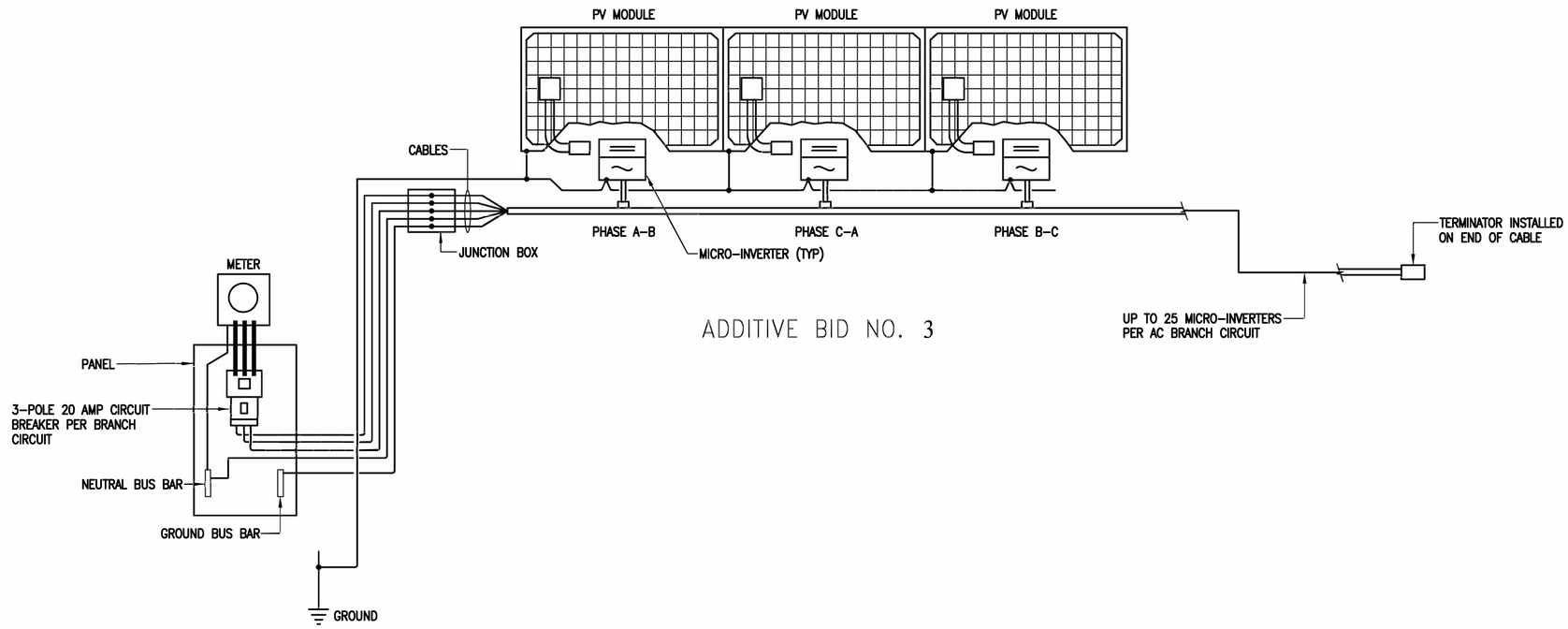

ADDITIVE BID NO. 3

MICRO INVERTER WIRING DIAGRAM (3 PHASE 208V)

NOT TO SCALE

REVISION NO.	SYM.	DESCRIPTION	SHT./OF	DATE	APPROVED

JOHN M. NOMURA
LICENSED PROFESSIONAL ENGINEER
No. 11670–E
HAWAII, U.S.A.

THIS LICENSE EXPIRES APRIL 30, 2024

SIGNATURE

THIS WORK WAS PREPARED BY ME OR UNDER MY SUPERVISION AND CONSTRUCTION OF THIS PROJECT WILL BE UNDER MY OBSERVATION. (OBSERVATION OF CONSTRUCTION AS DEFINED IN CHAPTER 16–115 OF THE HAWAII ADMINISTRATIVE RULES, DEPARTMENT OF COMMERCE AND CONSUMER AFFAIRS, ENTITLED PROFESSIONAL ENGINEERS, ARCHITECTS, SURVEYORS AND LANDSCAPE ARCHITECTS).

STATE OF HAWAII
DEPARTMENT OF LAND AND NATURAL RESOURCES
ENGINEERING DIVISION

HAWAII DISTRICT LAND OFFICE
HILO, HAWAI'I

PV WIRING DIAGRAM

DESIGNED: JN	SUBMITTED:
DRAWN: CAD	DATE: NOVEMBER 2022
CHECKED: JN	SCALE: AS NOTED
APPROVED: CHIEF ENGINEER	Carty Chang E-signed 2022-11-28 04:17PM HST carty.s.chang@hawaii.gov State of Hawaii Chief Engineer

DRAWING NO. E-403

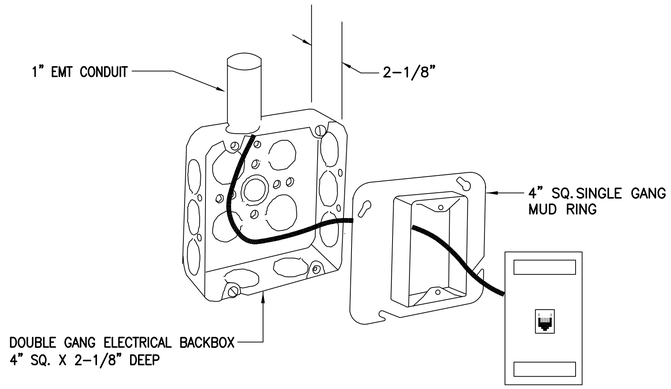

TEL/DATA OUTLET BOX DETAIL

NOT TO SCALE

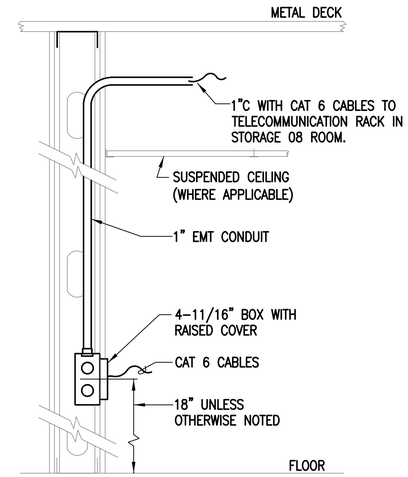

TYPICAL DATA AND TELEPHONE OUTLET DEVICE DETAIL

NOT TO SCALE

GENERAL TELECOMMUNICATION NOTES

1. TELECOMMUNICATION CABLING AND CONDUITS SHALL BE SUPPLIED BY ELECTRICAL CONTRACTOR AND CABLING INSTALLED BY A CERTIFIED NETWORK CABLE INSTALLER.
2. CONTRACTOR SHALL PROVIDE AND INSTALL TWO CAT 6 CABLES PER TELEPHONE/DATA OUTLET. CAT 6 CABLE FOR TELECOMMUNICATIONS CABLING SHALL BE ROUTED TO TELECOMMUNICATIONS EQUIPMENT RACK DESIGNATION ON DRAWING AND TERMINATED IN PATCH PANEL(S).
3. INSTALL IN ACCORDANCE WITH ANSI/TIA/EAI-568-C1, ANSI/TIA/EIA-568-C.2, ANSI/TIA/EIA-569-B STANDARDS AND NEC 2017 ARTICLE 800 REQUIREMENTS.
4. MAXIMUM ALLOWED LENGTH OF CAT 6 CABLE IS 328 FEET WHEN USED FOR 10/100/1000BASE-T.
5. TELECOM DROPS MUST TERMINATE IN A UTP PATCH PANEL LOCATED IN RACK ON THE NETWORK END AND A RJ-45 DEVICE END.
6. TELECOM BOXES MUST BE LABELED WITH THE PATCH PANEL NAME/NUMBER FROM THE PATCH PANEL IT TERMINATE IN.
7. TELECOMMUNICATION INFRASTRUCTURE SHALL BE LABELED AND IDENTIFIED IN ACCORDANCE WITH ANSI/TIA/EIA-606-A.
8. GROUNDING AND BONDING FOR INTERIOR TELECOMMUNICATIONS INFRASTRUCTURE SHALL BE IN ACCORDANCE WITH ANSI/TIA/EIA-607 AND NEC 2017 GROUNDING REQUIREMENS.
9. TELECOMMUNICATION CONTRACTOR SHALL COORDINATE HIS WORK WITH OTHER TRADES TO AVOID CONFLICTS WITH ELECTRICAL, MECHANICAL, PLUMBING, AND ARCHITECTURAL ELEMENTS OF THIS PROJECT.
10. FOR CONDUIT RUNS MORE THAN 100 FEET, PULL BOXES SHALL BE PROVIDED SO THAT NO SEGMENT BETWEEN PULL POINTS EXCEED THE 100 FOOT LIMIT.
11. NO SECTION SHALL CONTAIN MORE THAN TWO 90 DEGREE BENDS.
12. FOR CONDUITS WITH INTERNAL DIAMETER OF 2 INCHES OR LESS, INSIDE BEND RADIUS SHALL BE AT LEAST 6 TIMES THE INTERNAL DIAMETER.

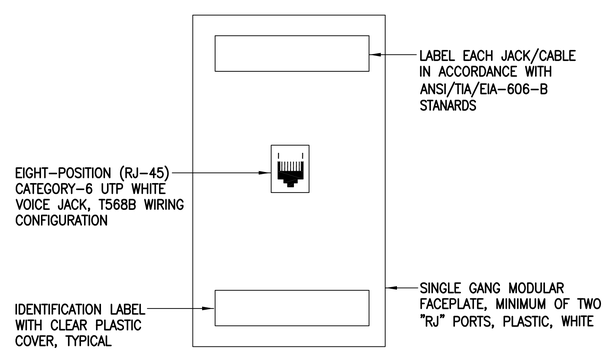

TEL/DATA OUTLET DETAIL

NOT TO SCALE

REVISION NO.	SYM.	DESCRIPTION	SHT./OF	DATE	APPROVED

JOHN M. NOMURA
LICENSED PROFESSIONAL ENGINEER
No. 11670-E
HAWAII, U.S.A.

THIS LICENSE EXPIRES APRIL 30, 2024

SIGNATURE

THIS WORK WAS PREPARED BY ME OR UNDER MY SUPERVISION AND CONSTRUCTION OF THIS PROJECT WILL BE UNDER MY OBSERVATION. OBSERVATION OF CONSTRUCTION AS DEFINED IN CHAPTER 16-115 OF THE STATE BOARD OF PROFESSIONAL ENGINEERS, COMMERCE AND CONSUMER AFFAIRS (ENTITLED PROFESSIONAL ENGINEERS, ARCHITECTS, SURVEYORS AND LANDSCAPE ARCHITECTS).

STATE OF HAWAII
DEPARTMENT OF LAND AND NATURAL RESOURCES
ENGINEERING DIVISION

HAWAII DISTRICT LAND OFFICE

HILO, HAWAI'I

TELECOMMUNICATION DETAILS

DESIGNED: JN	SUBMITTED:
DRAWN: CAD	DATE: NOVEMBER 2022
CHECKED: JN	SCALE: AS NOTED
APPROVED: CHIEF ENGINEER	DRAWING NO. E-501

Carty Chang
E-signed 2022-11-28 04:17PM HST
carty.s.chang@hawaii.gov
State of Hawaii
Chief Engineer

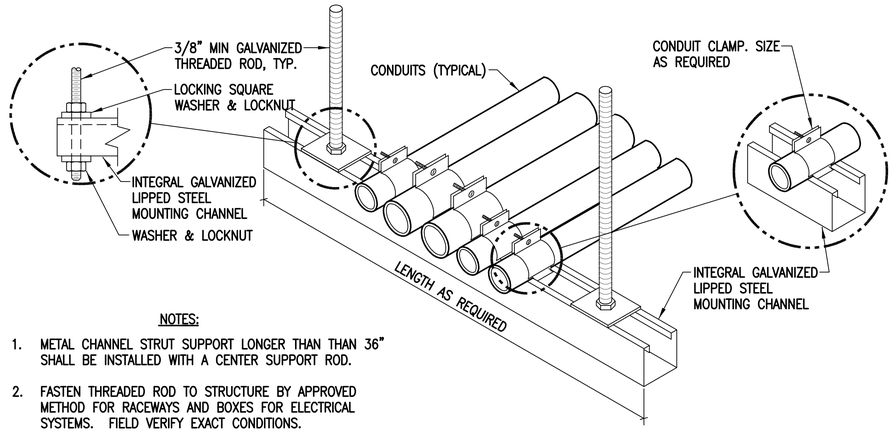

NOTES:

1. METAL CHANNEL STRUT SUPPORT LONGER THAN THAN 36" SHALL BE INSTALLED WITH A CENTER SUPPORT ROD.
2. FASTEN THREADED ROD TO STRUCTURE BY APPROVED METHOD FOR RACEWAYS AND BOXES FOR ELECTRICAL SYSTEMS. FIELD VERIFY EXACT CONDITIONS.

CONDUIT TRAPEZE MOUNTING DETAIL

NOT TO SCALE

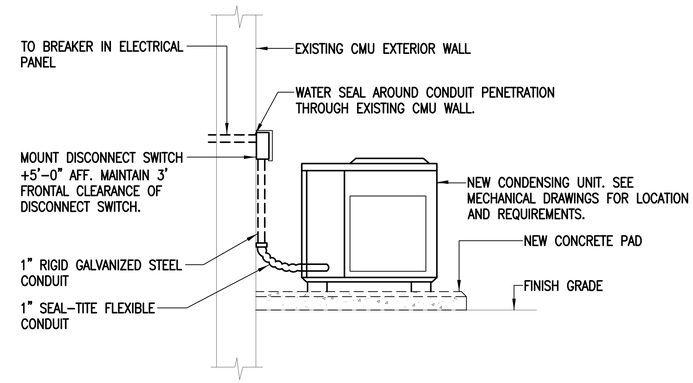

OUTDOOR A/C CONDENSING UNIT DETAIL

NOT TO SCALE

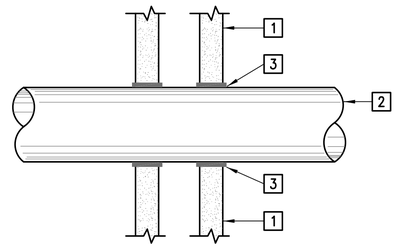

NOTES:

1. 1-HOUR FIRE RATED GYPSUM WALLBOARD.
2. A MAXIMUM OF ONE CONDUIT IS PERMITTED IN THE FIRE STOP SYSTEM. CONDUIT TO BE INSTALLED NEAR CENTER OF STUD CAVITY WIDTH AND TO BE RIGIDLY SUPPORTED ON BOTH SIDES OF WALL ASSEMBLY.
3. CAULK FILL MATERIAL BEARING THE UL CLASSIFICATION MARKING INSTALLED TO COMPLETELY FILL OPEN SPACE BETWEEN CONDUIT AND GYPSUM WALLBOARD. PROVIDE A MINIMUM OF 1/2" DIAMETER BEAD OF RED CAULK APPLIED TO PERIMETER OF CONDUIT AT ITS EGRESS FROM THE WALL. INSTALL CAULK SYMMETRICALLY ON BOTH SIDES OF WALL ASSEMBLY. THE HOURLY RATING IS OF THE FIRE STOP SYSTEM IS DEPENDANT UPON THE TYPE & SIZE OF CONDUIT.

CONDUIT PENETRATION OF FIRE WALL DETAIL

NOT TO SCALE

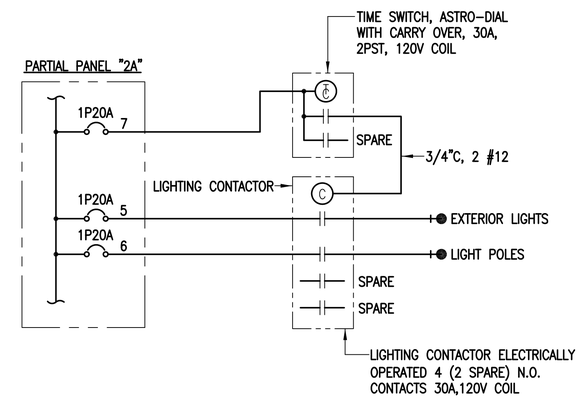

NIGHT LIGHT DIAGRAM

NOT TO SCALE

REVISION NO.	SYM.	DESCRIPTION	SHT./OF	DATE	APPROVED

JOHN M. NOMURA
LICENSED PROFESSIONAL ENGINEER
No. 11670-E
HAWAII, U.S.A.

THIS LICENSE EXPIRES APRIL 30, 2024

SIGNATURE

THIS WORK WAS PREPARED BY ME, OR UNDER MY SUPERVISION AND CONSTRUCTION OF THE PROJECT WAS SUPERVISED BY ONE OR MORE OF THE PERSONS OF CONSTRUCTION AS DEFINED IN CHAPTER 16-115 OF THE HAWAII ADMINISTRATIVE RULES, DEPARTMENT OF COMMERCE AND CONSUMER AFFAIRS ENTITLED PROFESSIONAL ENGINEERS, ARCHITECTS, SURVEYORS AND LANDSCAPE ARCHITECTS).

STATE OF HAWAII
DEPARTMENT OF LAND AND NATURAL RESOURCES
ENGINEERING DIVISION

HAWAII DISTRICT LAND OFFICE
HILO, HAWAI'I

ELECTRICAL DETAILS

DESIGNED: JN	SUBMITTED:
DRAWN: CAD	DATE: NOVEMBER 2022
CHECKED: JN	SCALE: AS NOTED
APPROVED: Carty Chang E-signed 2022-11-28 04:17PM HST carty.s.chang@hawaii.gov State of Hawaii Chief Engineer	DRAWING NO. E-502
CHIEF ENGINEER	

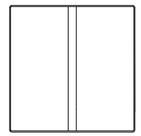

TYPE	LAMP	MOUNTING	DESCRIPTION
A	16.5W LED, 2091K, 1900 LUMENS, 80 CRI	RECESSED GRID	LED 2'x2' SHALLOW 3 1/16" DEEP HOUSING EXTRUDED ALUMINUM FRAME. INJECTED MOLDED COMPOSITE END PLATES. 0–10V DIMMING DRIVER TO 1% STANDARD. PROJECTED LIFE OF 100,000 HOURS AT 92% LUMEN OUTPUT. ELECTRONIC DRIVER FOR UNIVERSAL 120–277V. HIGH REFLECTANCE BAKED MATTE WHITE ENAMEL FINISH. POSITIVELY RETAINED HIGH OPTICAL GRADE ACRYLIC LENSES. UL LISTED. COMPLIES WITH IESNA LM–79 AND LM–80 STANDARDS. METALUX (OR EQUAL) 22EN–LD2–19–UNV–L835–CD1–U

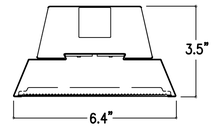

TYPE	LAMP	MOUNTING	DESCRIPTION
B	35.0W LED, 3500K, 3400 LUMENS, 80 CRI	PENDANT MOUNTED	LED COMPACT 3.5"x6.4"x4' PROFILE WITH DIE–FORMED 20 GUAGE COLD ROLLED STEEL UPPER CHANNEL. DIE–FORMED ALUMINUM LOWER HOUSING. END CAPS ARE INJECTION MOLDED POLYCARBONATE, MECHANICALLY ATTACHED WITH NO FASTENERS. ELECTRONIC DRIVER FOR UNIVERSAL 120–277V. 0–10V DIMMING DRIVER TO 1% STANDARD. AIRCRAFT CABLE MOUNTS. POLYESTER POWDER COAT PAINT WITH WHITE FINISH. CORELITE (OR EQUAL) RZL–NL–40L–835–1–UNV–STD–W–PP–4

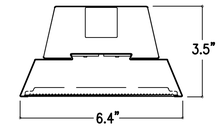

TYPE	LAMP	MOUNTING	DESCRIPTION
C	70.0W LED, 3500K, 3400 LUMENS, 80 CRI	PENDANT MOUNTED	LED COMPACT 3.5"x6.4"x8' PROFILE WITH DIE–FORMED 20 GUAGE COLD ROLLED STEEL UPPER CHANNEL. DIE–FORMED ALUMINUM LOWER HOUSING. END CAPS ARE INJECTION MOLDED POLYCARBONATE, MECHANICALLY ATTACHED WITH NO FASTENERS. ELECTRONIC DRIVER FOR UNIVERSAL 120–277V. 0–10V DIMMING DRIVER TO 1% STANDARD. AIRCRAFT CABLE MOUNTS. POLYESTER POWDER COAT PAINT WITH WHITE FINISH. CORELITE (OR EQUAL) RZL–NL–40L–835–1–UNV–STD–W–PP–8

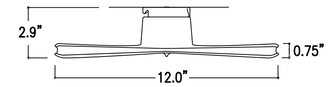

TYPE	LAMP	MOUNTING	DESCRIPTION
D	22.4W LED, 3500K, 3000 LUMENS, 80 CRI	SURFACE MOUNTED	LED 2 1/4"x12" HOUSING CONSTRUCTED FROM EXTRUDED ALUMINUM AND DIE–FORMED 20 GAUGE COLD ROLLED STEEL. INTEGRAL ELECTRONIC DRIVER FOR UNIVERSAL 120–277V. 0–10V DIMMING DRIVER TO 1% STANDARD. POLYESTER POWER COAT PAINT WITH WHITE FINISH. CORELITE (OR EQUAL) DSI–WS–30L–835–1D–UNV–STD–SC–W–SU–4

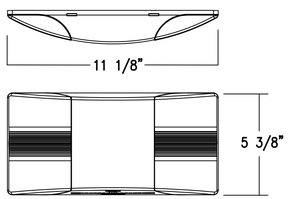

TYPE	LAMP	MOUNTING	DESCRIPTION
E	5W LED	SURACE WALL MOUNTED	LED EMERGENCY LIGHT. INJECTION MOLDED HIGH IMPACT THERMOPLASTIC. SEALED NICKEL CADMINUM. UL924 LISTED SURE–LITES (OR EQUAL) CU2–LED

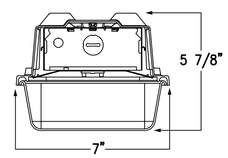

TYPE	LAMP	MOUNTING	DESCRIPTION
F	5W LED	PENDANT MOUNTED	FIBERGLASS HOUSING WITH REINFORCED POLYESTER AND SELF–EXTINGUISHING PLASTIC. ELECTRONIC DRIVER WITH UNIVERSAL 120–277V. 0–10V DIMMING CONTROL. HIGH IMPACT DIFFUSER LENS METALUX (OR EQUAL) 4VT2–LD5–4–DR–UNV–L835–CD1–WL–U–VT2–CHAIN/SET–U–VT2–SS–MBK

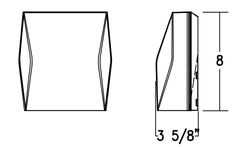

TYPE	LAMP	MOUNTING	DESCRIPTION
G	27W LED	SURFACE WALL MOUNTED	LOW PROFILE RUGGED DIE–CAST ALUMINUM HOUSING. SILICONE SEALED OPTICAL LED CHAMBER. INTEGRAL LED ELECTRONIC DRIVER. UNIVERSAL 120–277V. TGIC POLYESTER POWDER COAT PAINT IN CARBON BRONZE FINISH. LUMARK (OR EQUAL) AXCS3A–W–BK
G1	44W LED		LUMARK (OR EQUAL) AXCS4A–W–BK

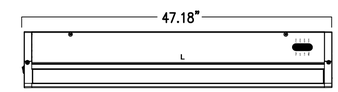

TYPE	LAMP	MOUNTING	DESCRIPTION
H	27W LED	WALL MOUNTED	UNDERCABINET LOW PROFILE EXTRUDED ALUMINUM HOUSING. INTEGRAL LED ELECTRONIC DRIVER. UNIVERSAL 120–277V. PIR MOTION SENSOR. WHITE FINISH. HALO (OR EQUAL) HU30–ADV–48–P–HU107

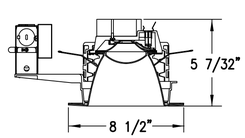

TYPE	LAMP	MOUNTING	DESCRIPTION
I	11W LED	RECESSED MOUNTED	6" LED RECESSED VANDAL RESISTANT DOWNLIGHT. SELF–FLANGED, SPUN .050" THICK ALUMINUM LOWER REFLECTOR. COMBINATION 120–277V DRIVER. 0.060" THICK FROSTED POLYCARBONATE LENS. UL WET LISTED. FAIL SAFE (OR EQUAL) FLD6BX–10–D010–FEU6B–1/2–80–35–M–1–LI–HB26

TYPE	LAMP	MOUNTING	DESCRIPTION
X	1.02W LED	SURFACE/ CEILING	COMPACT LOW–PROFILE, ENERGY EFFICIENT LED, EZ SNAP–OUT CHEVRON DIRECTIONAL INDICATORS, GREEN LETTERS, WHITE HOUSING, DUAL 120V/277V VOLTAGE, UL LISTED SURE LITES (OR EQUAL) LPX–7

REVISION NO.	SYM.	DESCRIPTION	SHT./OF	DATE	APPROVED

JOHN M. NOMURA
LICENSED PROFESSIONAL ENGINEER
No. 11670–E
HAWAII, U.S.A.

THIS LICENSE EXPIRES APRIL 30, 2024

SIGNATURE

THIS WORK WAS PREPARED BY ME OR UNDER MY SUPERVISION AND CONSTRUCTION OF THIS PROJECT WILL BE UNDER MY OBSERVATION. (OBSERVATION OF CONSTRUCTION AS DEFINED IN CHAPTER 16–115 OF THE HAWAII ADMINISTRATIVE RULES, DEPARTMENT OF COMMERCE AND CONSUMER AFFAIRS, ENTITLED PROFESSIONAL ENGINEERS, ARCHITECTS, SURVEYORS AND LANDSCAPE ARCHITECTS).

STATE OF HAWAII
DEPARTMENT OF LAND AND NATURAL RESOURCES
ENGINEERING DIVISION

HAWAII DISTRICT LAND OFFICE
HILO, HAWAI'I

LUMINAIRE SCHEDULE

DESIGNED: JN	SUBMITTED:
DRAWN: CAD	DATE: NOVEMBER 2022
CHECKED: JN	SCALE: AS NOTED
APPROVED:	DRAWING NO. E-601
CHIEF ENGINEER	

Carty Chang
E-signed 2022-11-28 04:17PM HST
carty.s.chang@hawaii.gov
State of Hawaii
Chief Engineer

PANEL "2A" (SECTION 1) 208 / 120 VOLTS 3 ø 4WSN FLUSH MOUNTED

3P200A MAIN BREAKER BREAKER MIN. I.C. 18,000 A.I.C.

20" WIDE CABINET, INDUSTRIAL BOLTED, HALF WIDTH BREAKERS NOT PERMITTED

CIRCUIT NO.	BREAKER	LOAD	KVA ØA	KVA ØB	KVA ØC	WIRE
1	1P20A	LTS – OPEN OFFICE, HALLWAYS	1.0			12
2	1P20A	LTS – CONFERENCE ROOM, OFFICES	1.0			12
3	1P20A	LTS – BREAK ROOM, OFFICES		1.0		12
4	1P20A	LTS – SECURED STORAGE		1.0		10
5	1P20A	LTS – EXTERIOR BUILDING			1.0	10
6	1P20A	LTS – EXTERIOR POLE LIGHTS			1.0	10
7	1P20A	TIME CLOCK	0.1			12
8	1P20A	SPARE				
9	1P20A	RECEP – STORAGE		0.4		12
10	1P20A	RECEP – MANAGER'S OFFICE		1.0		12
11	1P20A	RECEP – IT RACK			0.4	12
12	1P20A	RECEP – LAND AGENT 1			0.8	12
13	1P20A	RECEP – RESTROOMS, EXTERIOR	0.6			12
14	1P20A	RECEP – LAND AGENT 2	1.0			12
15	1P20A	RECEP – BREAK ROOM REFRIGERATOR		1.2		12
16	1P20A	RECEP – LAND AGENT 3		0.8		12
17	1P20A	RECEP – BREAK ROOM			0.4	12
18	1P20A	RECEP – OPEN OFFICE WORKSTATIONS			0.8	12
19	1P20A	RECEP – EXTERIOR	0.4			12
20	1P20A	RECEP – OPEN OFFICE WORKSTATIONS	0.8			12
21	1P20A	RECEP – BREAK ROOM COUNTER		0.2		12
22	1P20A	RECEP – OPEN OFFICE WORKSTATIONS		0.6		12
23	1P20A	RECEP – BREAK ROOM COUNTER			0.2	12
24	1P20A	RECEP – OPEN OFFICE PRINTER			1.0	12
25	1P20A	RECEP – BREAK ROOM COUNTER	0.2			12
26	1P20A	RECEP – SECURED STORAGE	1.0			12
27	1P20A	RECEP – HALLWAYS		0.8		12
28	1P20A	RECEP – SECURED STORAGE FILE MOVER		1.0		12
29	1P20A	RECEP – COPY AREA COUNTER			0.4	12
30	1P20A	ELECTRONIC GATE CONTROLLER			1.0	12
31	1P20A	RECEP – COPY AREA COPIER MACHINE	1.2			12
32	1P20A	SPARE				
33	1P20A	RECEP – CONFERENCE ROOM COUNTER		0.4		12
34	1P20A	RECEP – EXTERIOR		0.4		12
35	1P20A	RECEP– CONFERENCE ROOM			0.8	12
36	1P20A	SPARE				
37	1P20A	RECEP – CONFERENCE ROOM	0.4			12
38	1P20A	SPARE				
39	1P20A	SPARE				
40	1P20A	SPARE				
41	1P20A	SPARE				
42	1P20A	SPARE				

PANEL "2A" (SECTION 2) 208 / 120 VOLTS 3 ø 4WSN FLUSH MOUNTED

3P225A MAIN LUGS ONLY BREAKER MIN. I.C. 18,000 A.I.C.

20" WIDE CABINET, INDUSTRIAL BOLTED, HALF WIDTH BREAKERS NOT PERMITTED

CIRCUIT NO.	BREAKER	LOAD	KVA ØA	KVA ØB	KVA ØC	WIRE
43,45	2P15A	FCU–1	0.1	0.1		12
44,46	2P15A	FCU–2	0.1	0.1		12
47,49	2P15A	FCU–3		0.1	0.1	12
48,50	2P15A	FCU–4		0.1	0.1	12
51,53	2P15A	FCU–5	0.1	0.1		12
52,54	2P15A	FCU–6	0.1	0.1		12
55,57	2P15A	FCU–7	0.1	0.1		12
56,58	2P15A	FCU–8	0.2	0.2		12
59,61	2P15A	FCU–9		0.4	0.4	12
60,62	2P15A	FCU–10		0.2	0.2	12
64,66	2P30A	EWH–1 TANKLESS WATER HEATER		3.0	3.0	10
63,65,67	3P60A	ACCU–1 (MODULE 1)	5.0	5.0	5.0	6
66.68.70	3P35A	ACCU–2 (MODULE 2)	2.9	2.9	2.9	8
69	1P20A	SPARE				
71	1P20A	SPARE				
72	1P20A	SPARE				
73	1P20A	SPARE				
74	1P20A	SPARE				
75	1P20A	SPARE				
76	1P20A	SPARE				
77	1P20A	SPARE				
78	1P20A	SPARE				
79	1P20A	SPARE				
81	1P	PFB				
80,82,84	3P	PROVISION FOR PV SYSTEM BY OTHERS				
83	1P	PFB				
		TOTALS:	16.3	20.2	20.3	

TOTAL RECEP. LOAD:	17,200 VA		
RECEP. 1ST 10,000 VA @ 100%	10,000 VA	@100%	10,000 VA
REST @ 50%	7,200 VA	@100%	3,600 VA
LIGHTING LOAD @ 125%	7,500 VA	@125%	9,375 VA
LARGEST MOTOR @ 125%	0 VA	@125%	0 VA
OTHER MOTORS @ 100%	0 VA	@100%	0 VA
AIR CONDITIONERS @ 100%	26,700 VA	@100%	26,700 VA
KITCHEN EQUIPMENT @ 65%	0 VA	@100%	0 VA
REST OF ALL OTHER LOADS @ 100%	7,100 VA	@100%	7,100 VA
		TOTAL:	56,775 VA

TOTAL LOAD: (VA) / (208V x 1.732) = 157.7 AMPS

REVISION NO.	SYM.	DESCRIPTION	SHT./OF	DATE	APPROVED

JOHN M. NOMURA
LICENSED PROFESSIONAL ENGINEER
No. 11670-E
HAWAII, U.S.A.

THIS LICENSE EXPIRES APRIL 30, 2024

SIGNATURE

THIS WORK WAS PREPARED BY ME, OR UNDER MY SUPERVISION AND CONSTRUCTION OF THIS PROJECT WILL BE UNDER MY OBSERVATION, (OBSERVATION OF CONSTRUCTION AS DEFINED IN CHAPTER 16-115 OF THE RULES OF PROFESSIONAL ENGINEERS, ARCHITECTS, DEPARTMENT OF COMMERCE AND CONSUMER AFFAIRS ENTITLED PROFESSIONAL ENGINEERS, ARCHITECTS, SURVEYORS AND LANDSCAPE ARCHITECTS).

STATE OF HAWAII
DEPARTMENT OF LAND AND NATURAL RESOURCES
ENGINEERING DIVISION

HAWAII DISTRICT LAND OFFICE

HILO, HAWAI'I

PANEL SCHEDULES

DESIGNED: JN	SUBMITTED:
DRAWN: CAD	DATE: NOVEMBER 2022
CHECKED: JN	SCALE: AS NOTED
APPROVED: CHIEF ENGINEER	Carty Chang E-signed 2022-11-28 04:17PM HST carty.s.chang@hawaii.gov State of Hawaii Chief Engineer

DRAWING NO. E-602